SPCO®

makes life easier

CC

Horizontal Closed Coupled pumps, 50Hz

Approvals

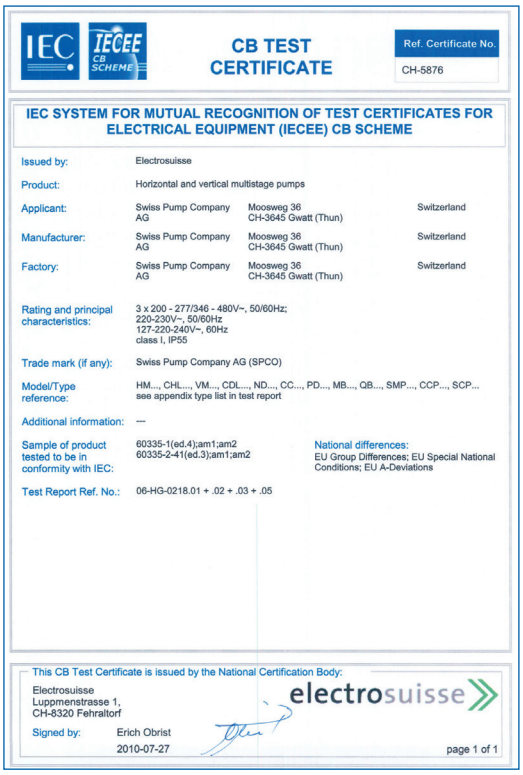

IEC IECEE CB SCHEME

CB TEST CERTIFICATE

Ref. Certificate No.
CH-5876

IEC SYSTEM FOR MUTUAL RECOGNITION OF TEST CERTIFICATES FOR ELECTRICAL EQUIPMENT (IECEE) CB SCHEME

Issued by:	Electrosuisse		
Product:	Horizontal and vertical multistage pumps		
Applicant:	Swiss Pump Company AG	Moosweg 36 CH-3645 Gwatt (Thun)	Switzerland
Manufacturer:	Swiss Pump Company AG	Moosweg 36 CH-3645 Gwatt (Thun)	Switzerland
Factory:	Swiss Pump Company AG	Moosweg 36 CH-3645 Gwatt (Thun)	Switzerland
Rating and principal characteristics:	3 x 200 - 277/346 - 480V~, 50/60Hz; 220-230V~, 50/60Hz 127-220-240V~, 60Hz class I, IP55		
Trade mark (if any):	Swiss Pump Company AG (SPCO)		
Model/Type reference:	HM..., CHL..., VM..., CDL..., ND..., CC..., PD..., MB..., QB..., SMP..., CCP..., SCP... see appendix type list in test report		
Additional information:	---		
Sample of product tested to be in conformity with IEC:	60335-1(ed.4);am1;am2 60335-2-41(ed.3);am1;am2	National differences: EU Group Differences; EU Special National Conditions; EU A-Deviations	
Test Report Ref. No.:	06-HG-0218.01 + .02 + .03 + .05		

This CB Test Certificate is issued by the National Certification Body:

Electrosuisse
Luppmenstrasse 1,
CH-8320 Fehraltorf

electrosuisse

Signed by: Erich Obrist
2010-07-27

page 1 of 1

CERTIFIED IQNet MANAGEMENT SYSTEM

IEC IECEE CB SCHEME

CE

Contents

Horizontal Closed Coupled Pumps

- CC pump series are designed and manufactured according to the European Standard DIN24255.
- Pump Shaft and motor shaft are close-coupled design.
- This way of coupling ensures the alignment of pump and motor.
- Pump impeller runs in good balance both dynamically and statically. therefore pump would be kept very well in operation.
- CC pumps are designed to be driven by IEC standard motor, and can be assembled separately without motor.
- CC Series are much shorter in length thus takes less space to install, and they also can be adjusted into different performance levels through impeller trimming.

Bare shaft pump

Complete pump set

Performance scope

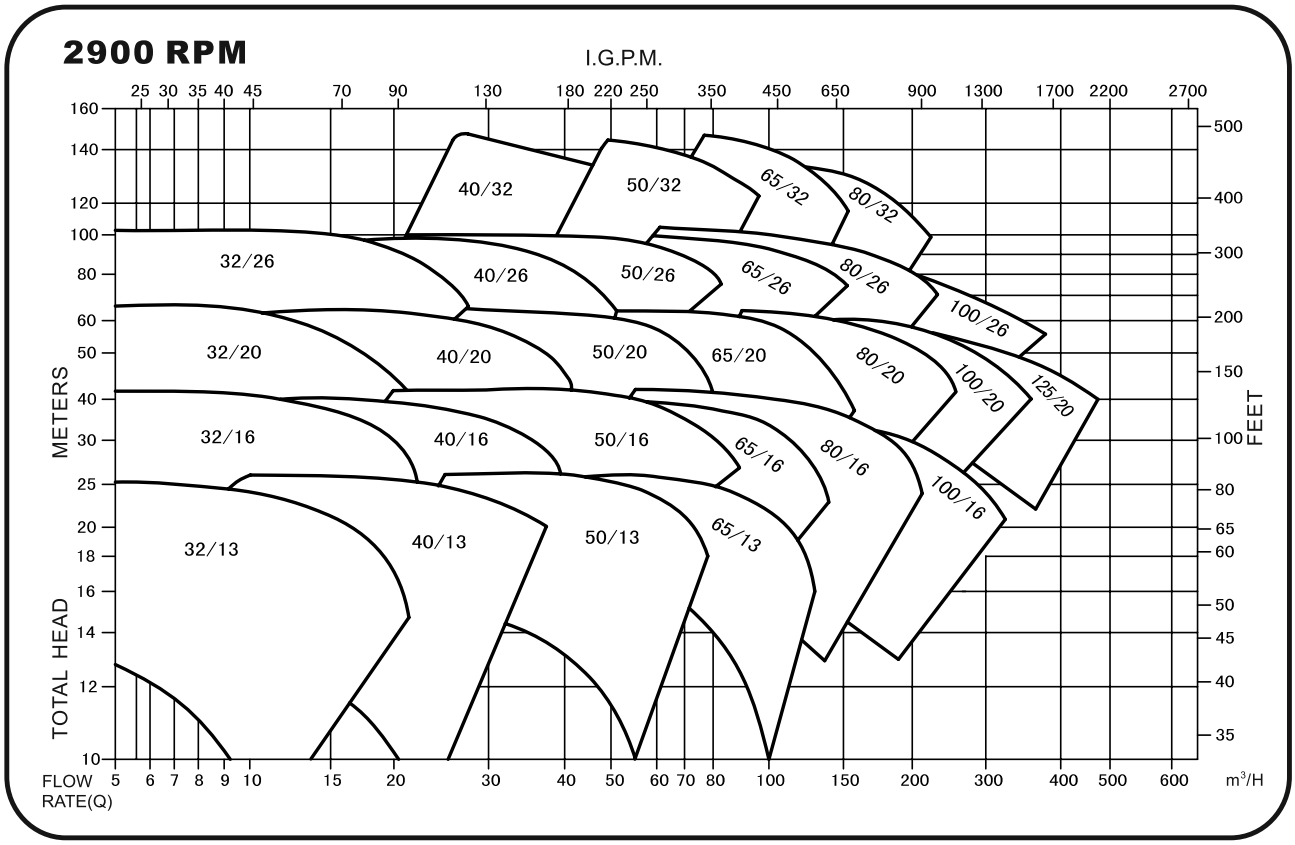

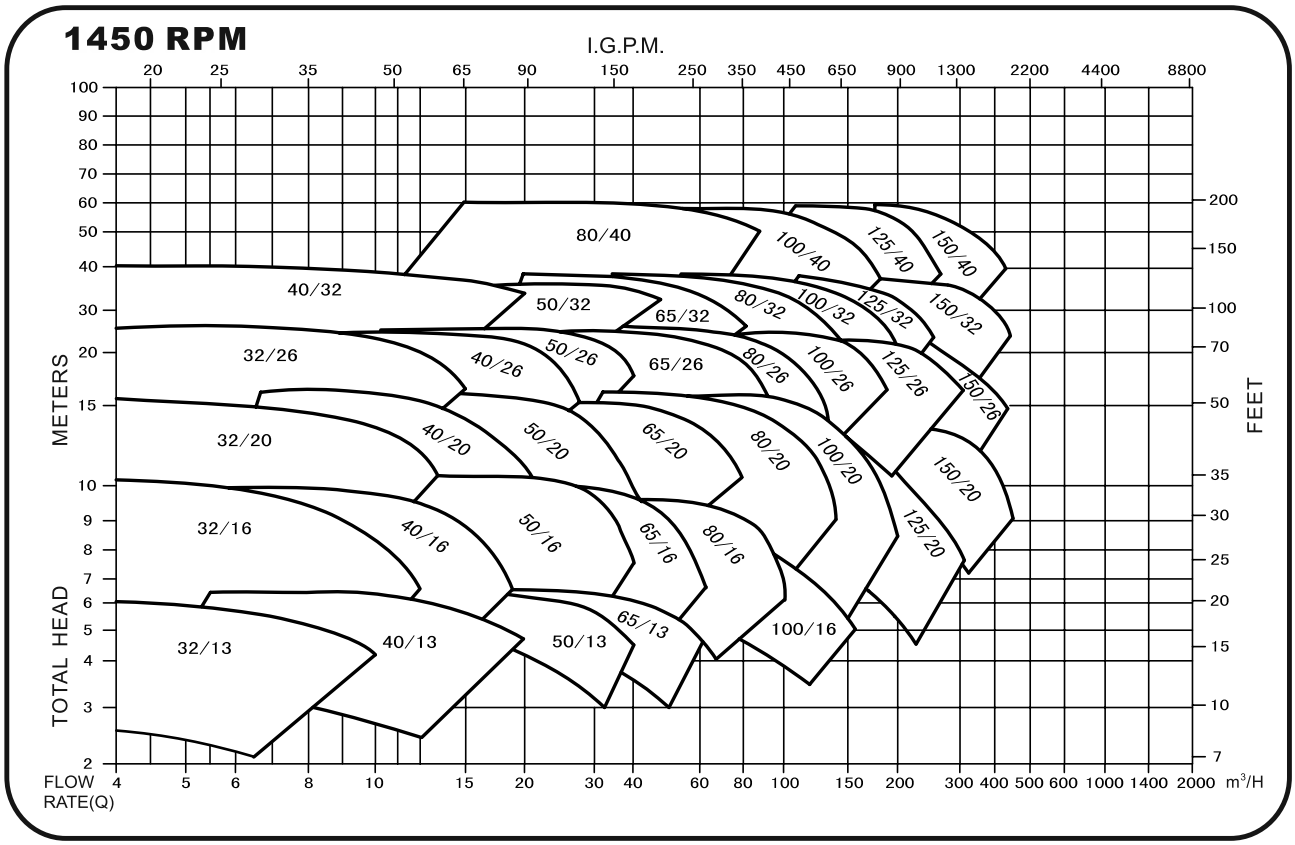

Applications

The pump is suitable for the pumping of thin, clean and non-aggressive liquids without solids particles or fibers in:

- Industry
- Water supply
- Air conditioning
- Construction
- Fire fighting
- Irrigation

Operating Condition

Flow Rate(Q) : 4 to 400m^3/h
Head(H) : 8 to 150m
Speed : 1450, 2900 rpm (50Hz)
Temperature : -10°C to 85°C standard , (120°C on request)
Using pressure: 10Bar standard
optional 16Bar

Design

Horizontal, Single-Stage Volute Casing pumps with dimensions and nominal ratings standard to DIN24255.

Type: Horizontal Closed Coupled Pump
Flange: DIN2501 standard, ANSI B16.5 class 150Lb optional
Rotation: Clockwise as viewed from the drive side.

Material:
Casing: Cast Iron, Ductile Iron, Stainless Steel.
Impeller: Bronze, Cast Iron, Stainless Steel.
Shaft : SS 420 (Standard), SS 304, SS 316, SS1045
Shaft Seal: Mechanical Seal

Definition of Model

CC 65/20 G-1850 2 - CI-BR-SS-MS-OL-ANSI

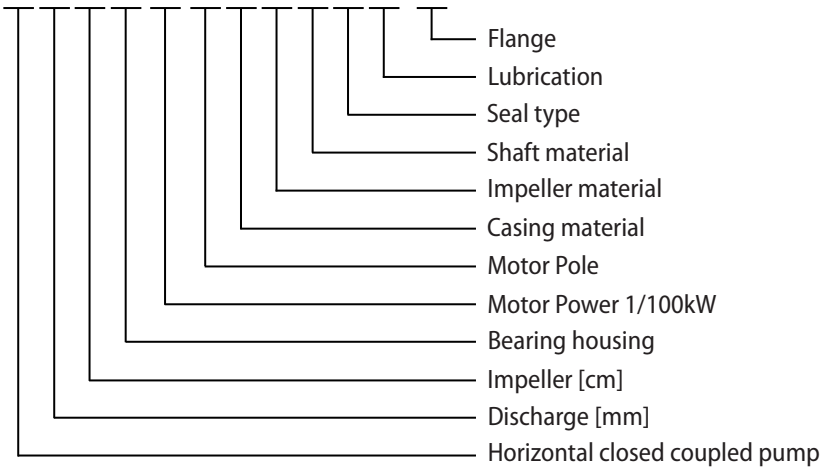

CC • Section drawing and Parts list

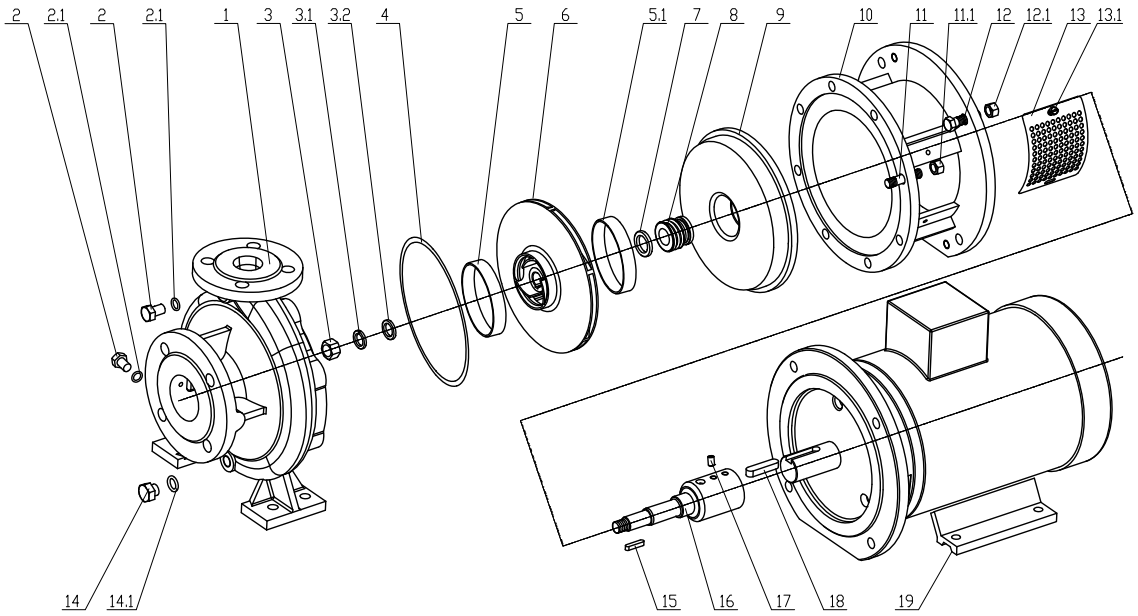

Code	Part Name	QTY
1	Casing	1
2	Plug	2
2.1	Plug Spacer	2
3	Nut	1
3.1	Flat Washer	1
3.2	Spring Washer	1
4	Casing Gasket	1
5	Front-Wear Ring	1
5.1	Back-Wear Ring	1
6	Impeller	1
7	Seal Seat	1
8	Mech.Seal	1
9	Casing Cover	1
10	Adapter	1

Code	Part Name	QTY
11	Screw Bolt	1set
11.1	Screw Nut	1set
12	Screw Bolt	1set
12.1	Screw Nut	1set
13	Guard	2
13.1	Screw	1set
14	Plug	1
14.1	Plug Spacer	1
15	key	1
16	Shaft	1
17	Screw	1set
18	key	1
19	Motor	1

Remark:

1) For the models other than 150/26、65/32、80/32、100/32、200/32、80/40、100/40、125/40、150/40 there is no parts of No.5.1.

2、 2) For the models of 40/32、50/32、65/32 and 80/32， while using 2900 or 3500 rpm， casing and casing cove should be made of ductile iron

Performance curves

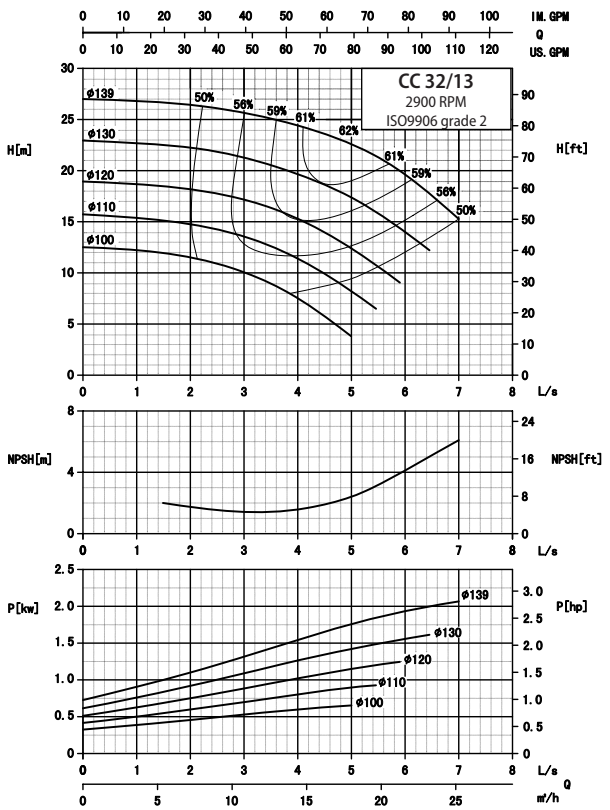

CC 32/13-2900

Installation sketch

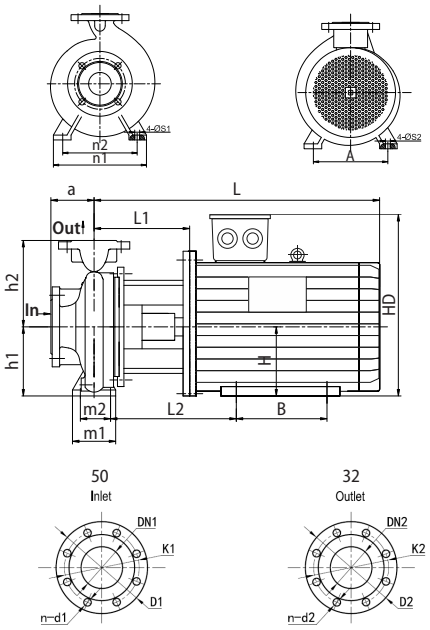

Dimensions -mm

DN1/DN2	32	40	50	65	80	100	125	150	200
D1/D2	140	150	165	185	200	220	250	285	340
K1/K2	100	110	125	145	160	180	210	240	295
n-d1/ n-d2	4-Φ18	4-Φ18	4-Φ18	4-Φ18	8-Φ18	8-Φ18	8-Φ18	8-Φ22	12-Φ22

Model	a	h1	h2	L1	L2	L	A	B	H	HD	m1	m2	n1	n2	S1	S2
CC 32/13-01102	80	112	140	152	167	407	125	100	80	220	100	70	190	140	14	10
CC 32/13-01502	80	112	140	152	173	422	140	100	90	250	100	70	190	140	14	10
CC 32/13-02202	80	112	140	152	173	447	140	125	90	250	100	70	190	140	14	10

Performance table

Model	Impeller Dia. [mm]	Motor size [kW]	Q [L/s]	2	3	4	5	6
CC 32/13-01102	100	1.1	H [m]	11.5	10	7.5	--	--
CC 32/13-01102	110	1.1		14.9	13.8	11.5	8.1	--
CC 32/13-01502	120	1.5		18	17	15.1	12.5	--
CC 32/13-02202	130	2.2		22.2	21.2	19.6	17.6	14
CC 32/13-02202	139	2.2		26.5	25.8	24.4	22.5	19.8

Performance curves

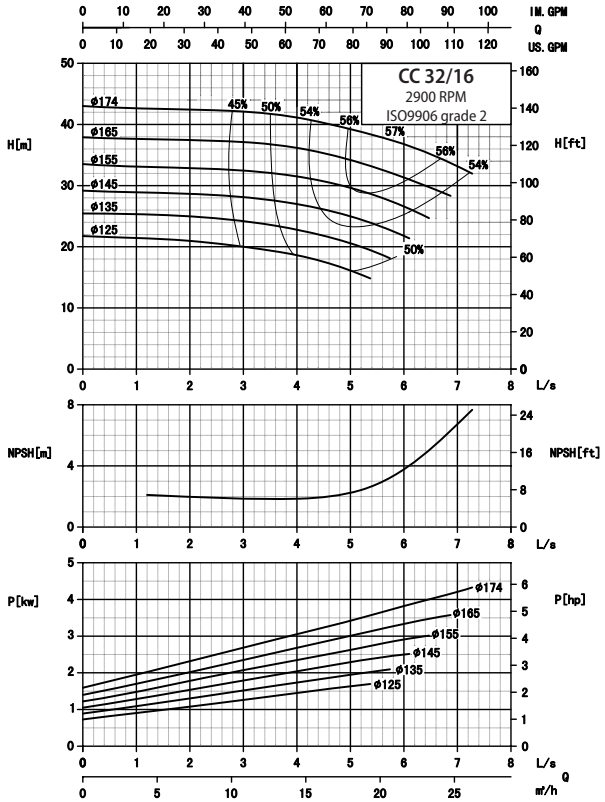

CC 32/16-2900

Installation sketch

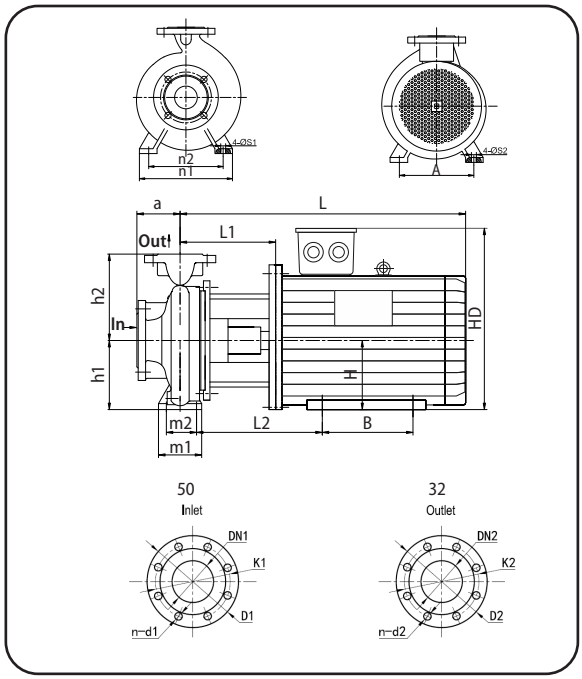

Dimensions -mm

DN1/DN2	32	40	50	65	80	100	125	150	200
D1/D2	140	150	165	185	200	220	250	285	340
K1/K2	100	110	125	145	160	180	210	240	295
n-d1/ n-d2	4-Φ18	4-Φ18	4-Φ18	4-Φ18	8-Φ18	8-Φ18	8-Φ18	8-Φ22	12-Φ22

Model	a	h1	h2	L1	L2	L	A	B	H	HD	m1	m2	n1	n2	S1	S2
CC 32/16-02202	80	132	160	152	173	447	140	125	90	250	100	70	240	190	14	10
CC 32/16-03002	80	132	160	164	192	489	160	140	100	270	100	70	240	190	14	12
CC 32/16-04002	80	132	160	164	199	504	190	140	112	300	100	70	240	190	14	12
CC 32/16-05502	80	132	160	187	241	577	216	140	132	345	100	70	240	190	14	15

Performance table

Model	Impeller Dia. [mm]	Motor size [kW]	Q [L/s]	2	3	4	5	6
CC 32/16-02202	125	2.2	H [m]	21	20	18.5	16	--
CC 32/16-02202	135	2.2		25	24	23	20.5	--
CC 32/16-03002	145	3		28.5	28	27	25	--
CC 32/16-04002	155	4		33	32.5	31.5	30	26.5
CC 32/16-04002	165	4		37.5	37	36	34	31.5
CC 32/16-05502	174	5.5		42.5	42	41	39	37

Performance curves

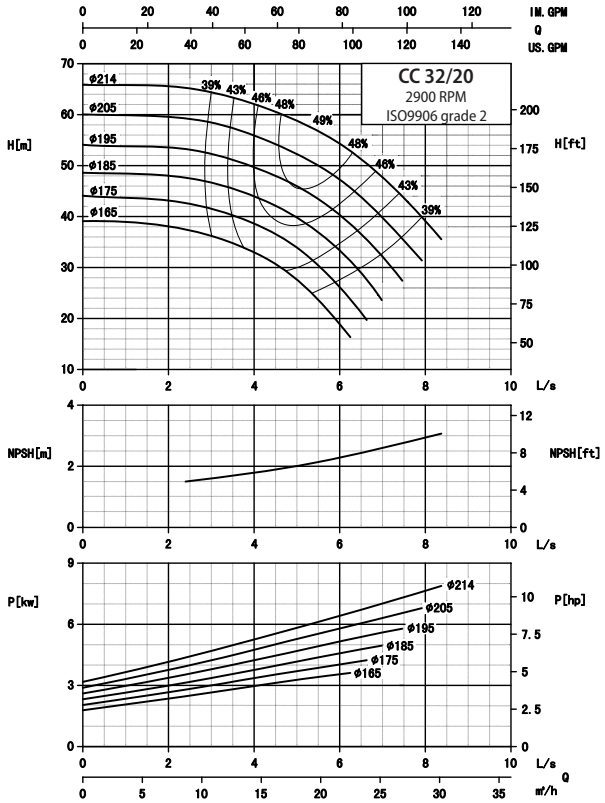

CC 32/20-2900

Installation sketch

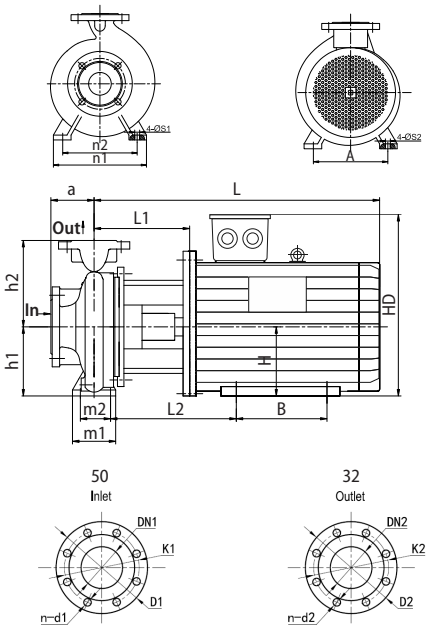

Dimensions -mm

DN1/DN2	32	40	50	65	80	100	125	150	200
D1/D2	140	150	165	185	200	220	250	285	340
K1/K2	100	110	125	145	160	180	210	240	295
n-d1/ n-d2	4-Φ18	4-Φ18	4-Φ18	4-Φ18	8-Φ18	8-Φ18	8-Φ18	8-Φ22	12-Φ22

Model	a	h1	h2	L1	L2	L	A	B	H	HD	m1	m2	n1	n2	S1	S2
CC 32/20-04002	80	160	180	163	198	503	190	140	112	300	100	70	240	190	14	12
CC 32/20-05502	80	160	180	186	240	576	216	140	132	345	100	70	240	190	14	12
CC 32/20-07502	80	160	180	186	240	576	216	140	132	345	100	70	240	190	14	12
CC 32/20-11002	80	160	180	218	291	723	254	210	160	420	100	70	240	190	14	15

Performance table

Model	Impeller Dia. [mm]	Motor size [kW]	Q [L/s]	3	4	5	6	7
CC 32/20-04002	165	4	H [m]	36	33	27.9	19	--
CC 32/20-05502	175	5.5		41.9	38.2	34	26	--
CC 32/20-05502	185	5.5		46.5	44	40	33.7	--
CC 32/20-07502	195	7.5		52	44.8	46	40.2	32
CC 32/20-07502	205	7.5		58.1	56	52	47.5	40
CC 32/20-11002	214	11		63	62	59	54	48

Performance curves

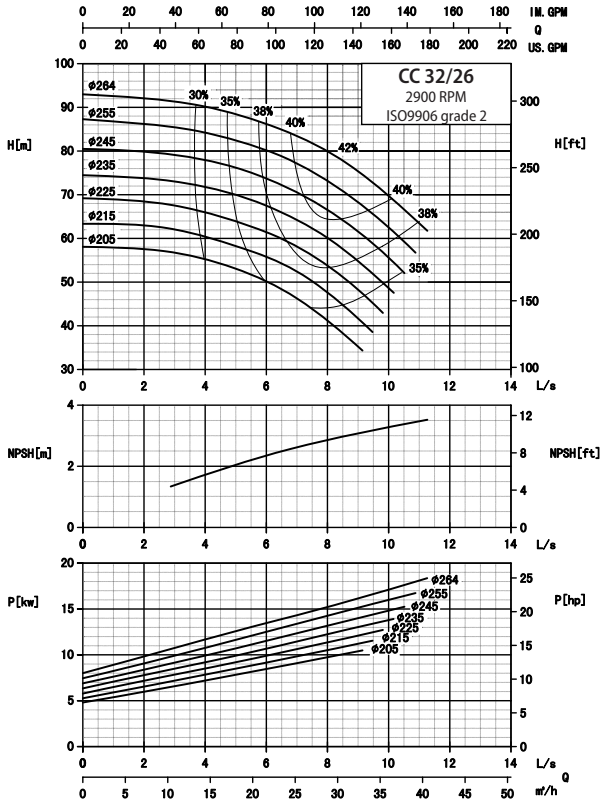

CC 32/26-2900

Installation sketch

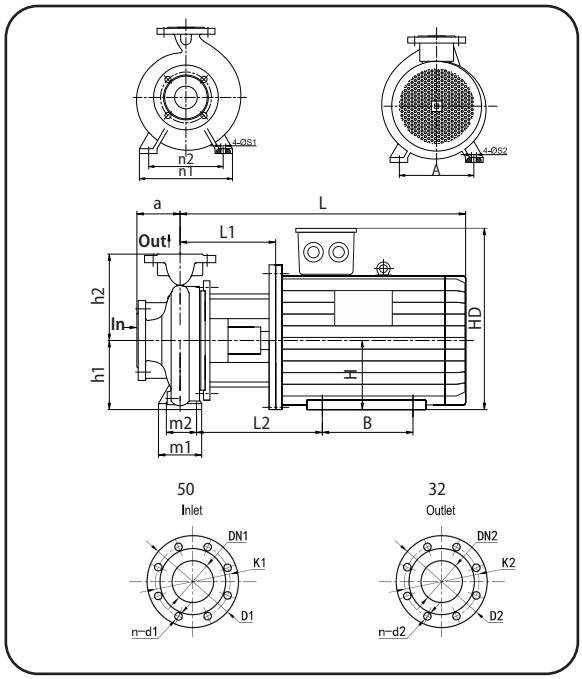

Dimensions -mm

DN1/DN2	32	40	50	65	80	100	125	150	200
D1/D2	140	150	165	185	200	220	250	285	340
K1/K2	100	110	125	145	160	180	210	240	295
n-d1/ n-d2	4-Φ18	4-Φ18	4-Φ18	4-Φ18	8-Φ18	8-Φ18	8-Φ18	8-Φ22	12-Φ22

Model	a	h1	h2	L1	L2	L	A	B	H	HD	m1	m2	n1	n2	S1	S2
CC 32/26-11002	100	180	225	228	287	733	254	210	160	420	125	95	320	225	14	15
CC 32/26-15002	100	180	225	228	287	733	254	210	160	420	125	95	320	225	14	15
CC 32/26-18502	100	180	225	228	287	788	254	254	160	420	125	95	320	225	14	15
CC 32/26-22002	100	180	225	228	300	819	279	241	180	455	125	95	320	225	14	15

Performance table

Model	Impeller Dia. [mm]	Motor size [kW]	Q [L/s]	3	4	6	8	10
CC 32/26-11002	205	11	H [m]	57	55.6	50	41	--
CC 32/26-11002	215	11		62	60.1	56	48	--
CC 32/26-15002	225	15		67.8	66	61.8	54	--
CC 32/26-15002	235	15		73	72	67.9	60	--
CC 32/26-15002	245	15		79	78	73.9	66.3	56
CC 32/26-18502	255	18.5		85.8	84	80	73.2	62.1
CC 32/26-18502	264	18.5		91.6	90	86	80	69.8

Performance curves

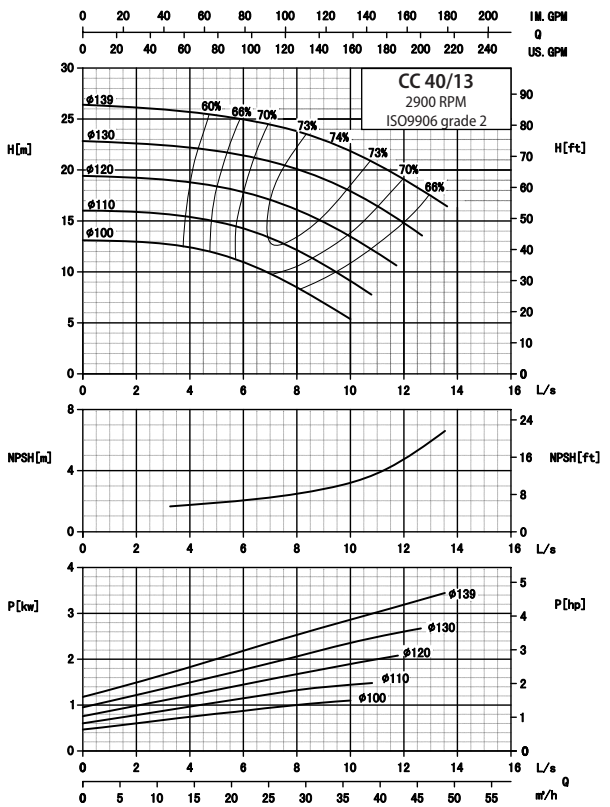

CC 40/13-2900

Installation sketch

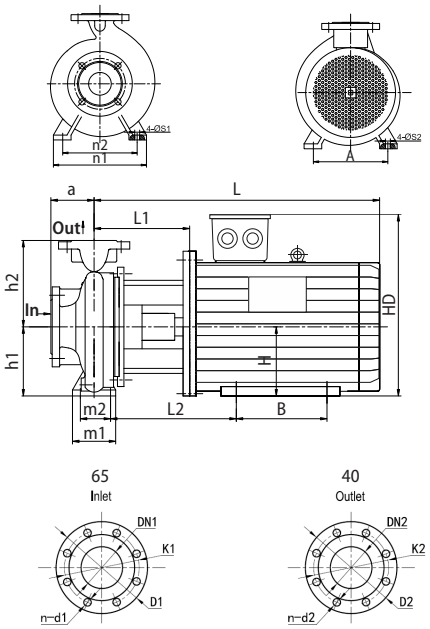

Dimensions -mm

DN1/DN2	32	40	50	65	80	100	125	150	200
D1/D2	140	150	165	185	200	220	250	285	340
K1/K2	100	110	125	145	160	180	210	240	295
n-d1/ n-d2	4-Φ18	4-Φ18	4-Φ18	4-Φ18	8-Φ18	8-Φ18	8-Φ18	8-Φ22	12-Φ22

Model	a	h1	h2	L1	L2	L	A	B	H	HD	m1	m2	n1	n2	S1	S2
CC 40/13-01502	80	112	140	152	173	422	140	100	90	250	100	70	210	160	14	10
CC 40/13-02202	80	112	140	152	173	447	140	125	90	250	100	70	210	160	14	10
CC 40/13-03002	80	112	140	164	192	489	160	140	100	270	100	70	210	160	14	12
CC 40/13-04002	80	112	140	164	199	504	190	140	112	300	100	70	210	160	14	12

Performance table

Model	Impeller Dia. [mm]	Motor size [kW]	Q [L/s]	4	6	8	10	12
CC 40/13-01502	100	1.5	H [m]	12.4	11	8.5	--	--
CC 40/13-02202	110	2.2		15.5	14.1	12.1	9	--
CC 40/13-02202	120	2.2		18.8	17.9	16	13.4	--
CC 40/13-03002	130	3		22.2	21.5	20	17.8	14.9
CC 40/13-04002	139	4		25.7	25	23.8	21.9	19

Performance curves

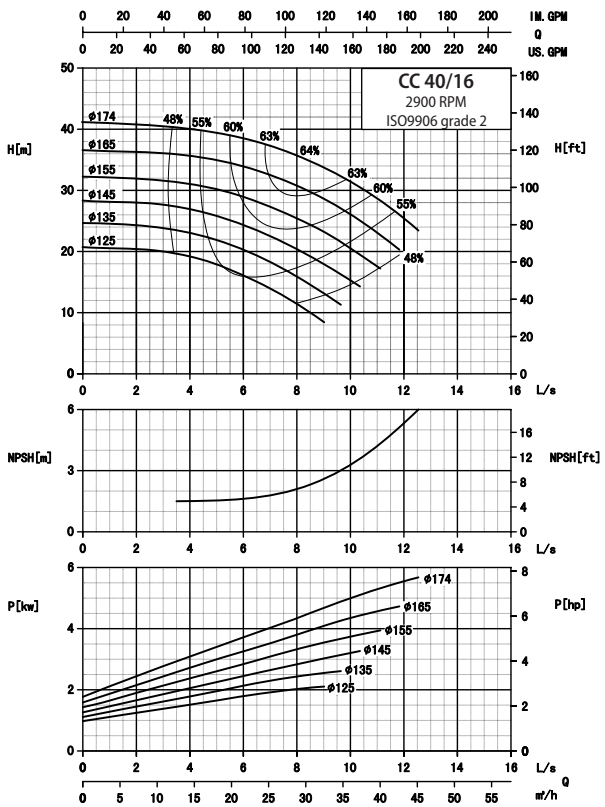

CC 40/16-2900

Installation sketch

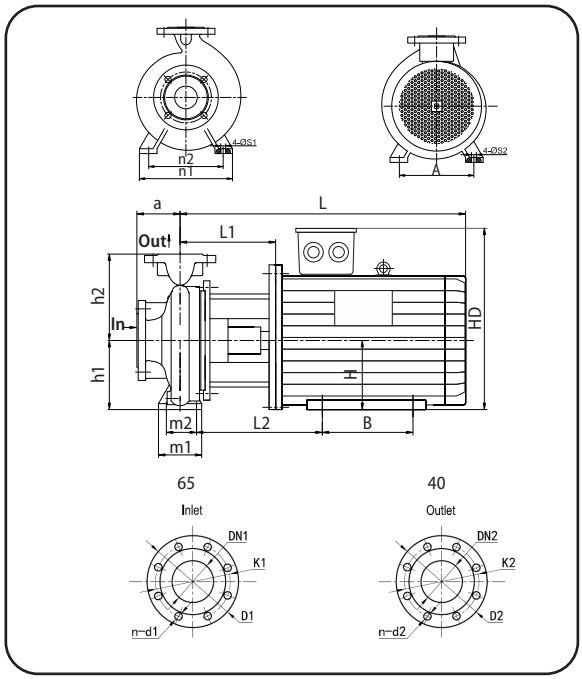

Dimensions -mm

DN1/DN2	32	40	50	65	80	100	125	150	200
D1/D2	140	150	165	185	200	220	250	285	340
K1/K2	100	110	125	145	160	180	210	240	295
n-d1/ n-d2	4-Φ18	4-Φ18	4-Φ18	4-Φ18	8-Φ18	8-Φ18	8-Φ18	8-Φ22	12-Φ22

Model	a	h1	h2	L1	L2	L	A	B	H	HD	m1	m2	n1	n2	S1	S2
CC 40/16-03002	80	132	160	164	192	489	1500	140	100	270	100	70	240	190	14	12
CC 40/16-04002	80	132	160	164	199	504	190	140	112	300	100	70	240	190	14	12
CC 40/16-05502	80	132	160	187	241	577	216	140	132	345	100	70	240	190	14	12
CC 40/16-07502	80	132	160	187	241	577	216	140	132	345	100	70	240	190	14	12

Performance table

Model	Impeller Dia. [mm]	Motor size [kW]	Q [L/s]	4	6	8	10	12
CC 40/16-03002	125	3	H [m]	19.5	16	11.7	--	--
CC 40/16-03002	135	3		23	20.1	16	--	--
CC 40/16-04002	145	4		27	24.2	20.3	15	--
CC 40/16-04002	155	4		31.2	29	25.7	20.2	--
CC 40/16-05502	165	5.5		35.9	34	30.8	26	--
CC 40/16-07502	174	7.5		40	38.3	35.9	31.9	25.9

Performance curves

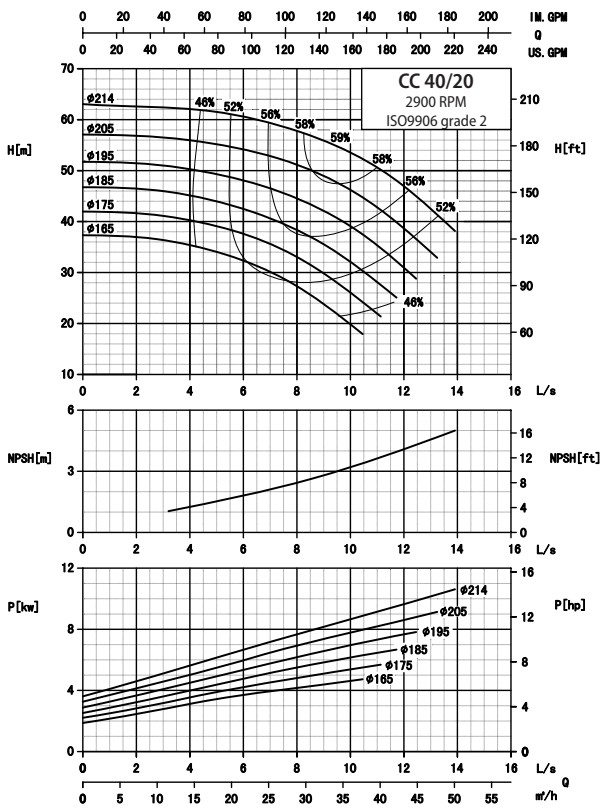

CC 40/20-2900

Installation sketch

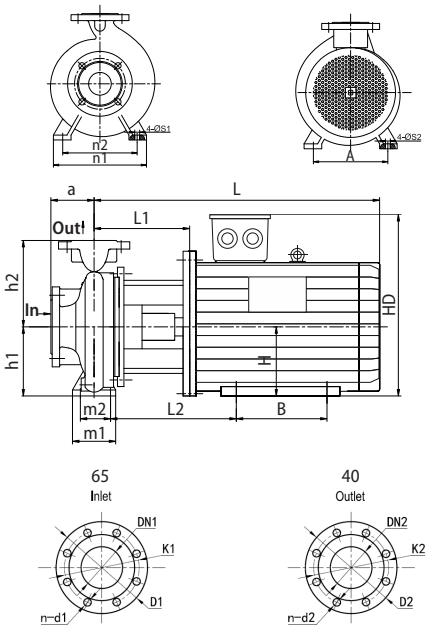

Dimensions -mm

DN1/DN2	32	40	50	65	80	100	125	150	200
D1/D2	140	150	165	185	200	220	250	285	340
K1/K2	100	110	125	145	160	180	210	240	295
n-d1/ n-d2	4-Φ18	4-Φ18	4-Φ18	4-Φ18	8-Φ18	8-Φ18	8-Φ18	8-Φ22	12-Φ22

Model	a	h1	h2	L1	L2	L	A	B	H	HD	m1	m2	n1	n2	S1	S2
CC 40/20-05502	100	160	180	186	240	576	216	140	132	345	100	70	265	212	14	12
CC 40/20-07502	100	160	180	186	240	576	216	140	132	345	100	70	265	212	14	12
CC 40/20-11002	100	160	180	218	291	723	254	210	160	420	100	70	265	212	14	15

Performance table

Model	Impeller Dia. [mm]	Motor size [kW]	Q [L/s]	4	6	8	10	12
CC 40/20-05502	165	5.5	H [m]	35.7	32.3	27.7	19.9	--
CC 40/20-07502	175	7.5		40.1	37.9	33	26	--
CC 40/20-07502	185	7.5		45.4	42.5	38.2	32	--
CC 40/20-11002	195	11		50.1	48	44.5	39	30.8
CC 40/20-11002	205	11		56	54	51	46.1	38.5
CC 40/20-11002	214	11		62	60.7	57.8	53.8	47

Performance curves

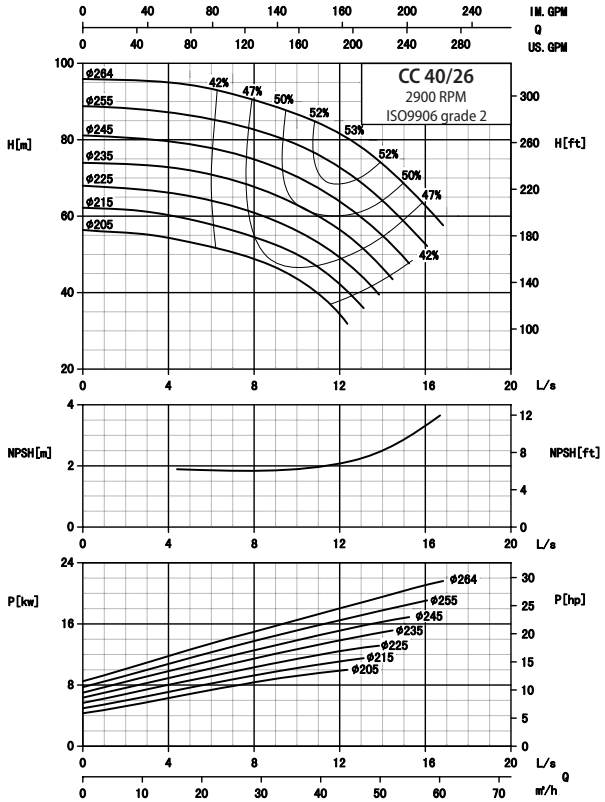

CC 40/26-2900

Installation sketch

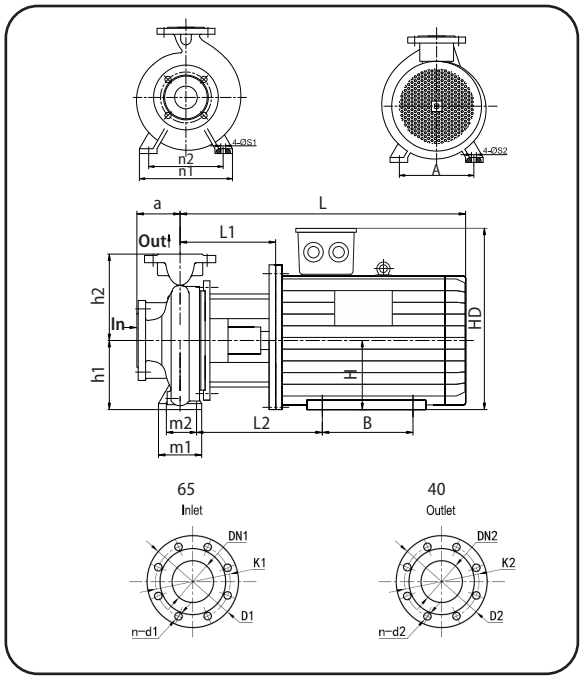

Dimensions -mm

DN1/DN2	32	40	50	65	80	100	125	150	200
D1/D2	140	150	165	185	200	220	250	285	340
K1/K2	100	110	125	145	160	180	210	240	295
n-d1/ n-d2	4-Φ18	4-Φ18	4-Φ18	4-Φ18	8-Φ18	8-Φ18	8-Φ18	8-Φ22	12-Φ22

Model	a	h1	h2	L1	L2	L	A	B	H	HD	m1	m2	n1	n2	S1	S2
CC 40/26-11002	100	180	225	228	287	733	254	241	160	420	125	95	320	250	14	15
CC 40/26-15002	100	180	225	228	287	733	254	254	160	420	125	95	320	250	14	15
CC 40/26-18502	100	180	225	228	287	788	254	254	160	420	125	95	320	250	14	15
CC 40/26-22002	100	180	225	228	300	818	279	241	180	455	125	95	320	250	14	15

Performance table

Model	Impeller Dia. [mm]	Motor size [kW]	Q [L/s]	6	8	10	12	16
CC 40/26-11002	205	11	H [m]	52	49	44	35	--
CC 40/26-15002	215	15		58	55	50	42.5	--
CC 40/26-15002	225	15		64	61	56	49	--
CC 40/26-15002	235	15		71	67.5	63	56	--
CC 40/26-18502	245	18.5		77.5	75	70	64	--
CC 40/26-18502	255	18.5		85	82.5	78.5	73	--
CC 40/26-22002	264	22		93	90	87	82	62.5

Performance curves

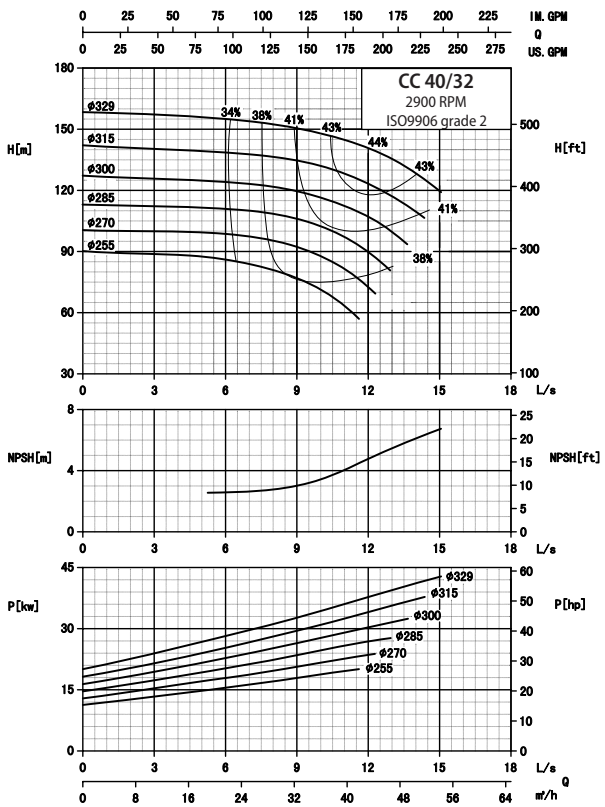

CC 40/32-2900

Installation sketch

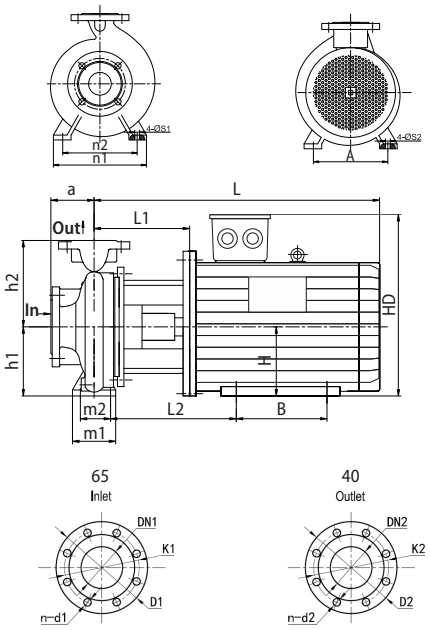

Dimensions -mm

DN1/DN2	32	40	50	65	80	100	125	150	200
D1/D2	140	150	165	185	200	220	250	285	340
K1/K2	100	110	125	145	160	180	210	240	295
n-d1/ n-d2	4-Φ18	4-Φ18	4-Φ18	4-Φ18	8-Φ18	8-Φ18	8-Φ18	8-Φ22	12-Φ22

Model	a	h1	h2	L1	L2	L	A	B	H	HD	m1	m2	n1	n2	S1	S2
CC 40/32-22002	125	200	250	231	292	861	279	241	180	455	125	95	345	280	14	15
CC 40/32-30002	125	200	250	237	323	897	318	305	200	505	125	95	345	280	14	19
CC 40/32-37002	125	200	250	237	323	897	318	305	200	505	125	95	345	280	14	19
CC 40/32-45002	125	200	250	237	339	942	356	311	225	560	125	95	345	280	14	19
CC 40/32-55002	125	200	250	273	394	1043	406	349	250	615	125	95	345	280	14	24

Performance table

Model	Impeller Dia. [mm]	Motor size [kW]	Q [L/s]	6	7.5	9	10.5	12
CC 40/32-22002	255	22	H [m]	86	83	77	67	--
CC 40/32-30002	270	30		98	96	93	85	72
CC 40/32-30002	285	30		111	109	106	100	90
CC 40/32-37002	300	37		124	122	119	115	107
CC 40/32-37002	315	37		138	136	135	130	124
CC 40/32-45002	329	45		155	152	150	146	140

Performance curves

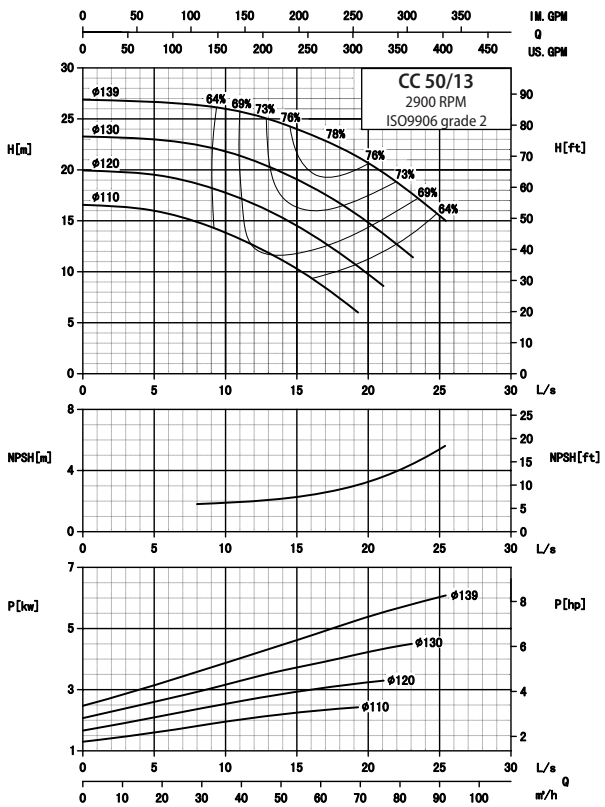

CC 50/13-2900

Installation sketch

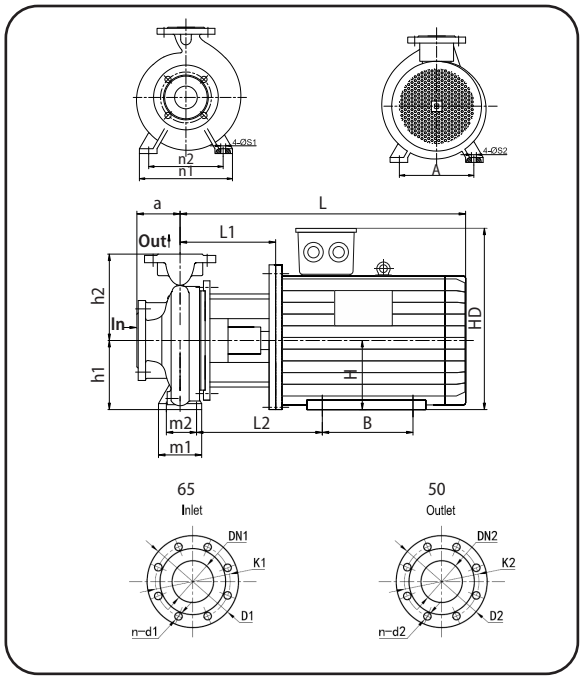

Dimensions -mm

DN1/DN2	32	40	50	65	80	100	125	150	200
D1/D2	140	150	165	185	200	220	250	285	340
K1/K2	100	110	125	145	160	180	210	240	295
n-d1/ n-d2	4-Φ18	4-Φ18	4-Φ18	4-Φ18	8-Φ18	8-Φ18	8-Φ18	8-Φ22	12-Φ22

Model	a	h1	h2	L1	L2	L	A	B	H	HD	m1	m2	n1	n2	S1	S2
CC 50/13-03002	100	132	160	164	192	489	160	140	100	270	100	70	240	190	14	12
CC 50/13-04002	100	132	160	164	199	504	190	140	112	300	100	70	240	190	14	12
CC 50/13-05502	100	132	160	187	241	577	216	140	132	345	100	70	240	190	14	12
CC 50/13-07502	100	132	160	187	241	577	216	140	132	345	100	70	240	190	14	12

Performance table

Model	Impeller Dia. [mm]	Motor size [kW]	Q [L/s]	10	12	15	18	20
CC 50/13-03002	110	3	H [m]	14	12.5	10.2	--	--
CC 50/13-04002	120	4		17.8	16.7	14.5	12	--
CC 50/13-05502	130	5.5		21.9	21	19	16.8	14.9
CC 50/13-07502	139	7.5		25.9	25.4	24	22.1	20.6

Performance curves

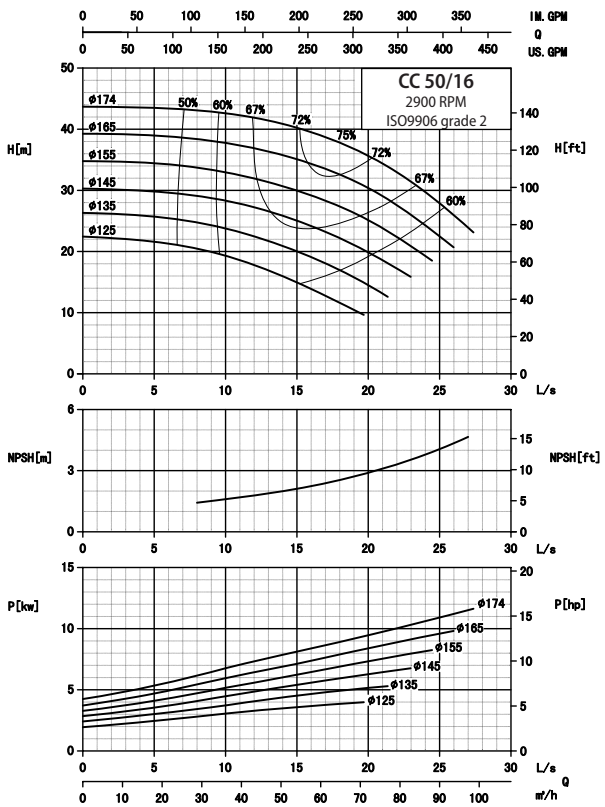

CC 50/16-2900

Installation sketch

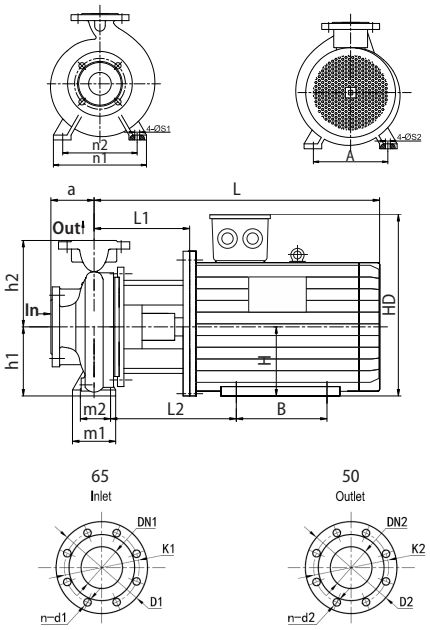

Dimensions -mm

DN1/DN2	32	40	50	65	80	100	125	150	200
D1/D2	140	150	165	185	200	220	250	285	340
K1/K2	100	110	125	145	160	180	210	240	295
n-d1/ n-d2	4-Φ18	4-Φ18	4-Φ18	4-Φ18	8-Φ18	8-Φ18	8-Φ18	8-Φ22	12-Φ22

Model	a	h1	h2	L1	L2	L	A	B	H	HD	m1	m2	n1	n2	S1	S2
CC 50/16-05502	100	160	180	187	241	577	216	140	132	345	100	70	265	212	14	12
CC 50/16-07502	100	160	180	187	241	577	216	140	132	345	100	70	265	212	14	12
CC 50/16-11002	100	160	180	220	293	725	254	210	160	420	100	70	265	212	14	15
CC 50/16-15002	100	160	180	220	293	725	254	210	160	420	100	70	265	212	14	15

Performance table

Model	Impeller Dia. [mm]	Motor size [kW]	Q [L/s]	10	15	18	20	25
CC 50/16-05502	125	5.5	H [m]	19	15	--	--	--
CC 50/16-07502	135	7.5		24	20	17	--	--
CC 50/16-07502	145	7.5		28	25	22	20	--
CC 50/16-11002	155	11		33	30	27	25	--
CC 50/16-11002	165	11		38	35	33	30	--
CC 50/16-15002	174	15		43	40	38	36	28

Performance curves

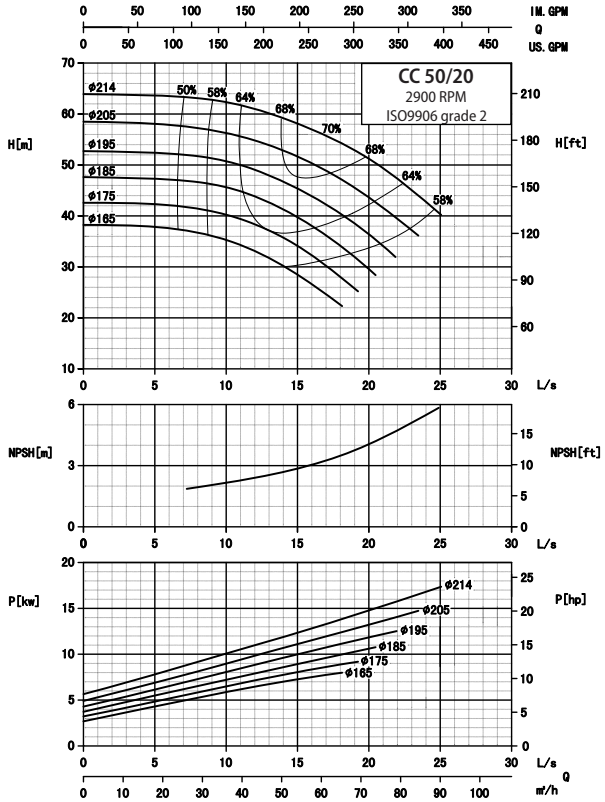

CC 50/20-2900

Installation sketch

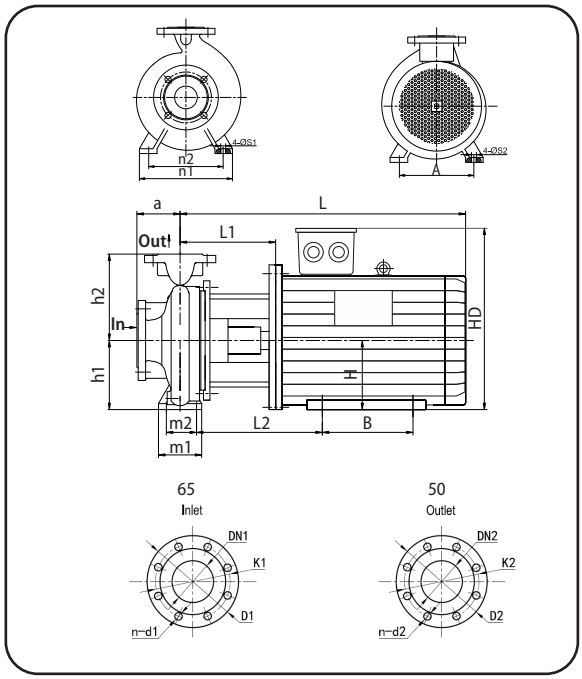

Dimensions -mm

DN1/DN2	32	40	50	65	80	100	125	150	200
D1/D2	140	150	165	185	200	220	250	285	340
K1/K2	100	110	125	145	160	180	210	240	295
n-d1/ n-d2	4-Φ18	4-Φ18	4-Φ18	4-Φ18	8-Φ18	8-Φ18	8-Φ18	8-Φ22	12-Φ22

Model	a	h1	h2	L1	L2	L	A	B	H	HD	m1	m2	n1	n2	S1	S2
CC 50/20-07502	100	160	200	190	241	580	216	140	132	345	100	70	265	212	14	15
CC 50/20-11002	100	160	200	221	291	726	254	210	160	420	100	70	265	212	14	15
CC 50/20-15002	100	160	200	221	291	726	254	210	160	420	100	70	265	212	14	15
CC 50/20-18502	100	160	200	221	291	781	254	254	160	420	100	70	265	212	14	15

Performance table

Model	Impeller Dia. [mm]	Motor size [kW]	Q [L/s]	10	12.5	15	17.5	20
CC 50/20-07502	165	7.5	H [m]	35	33	28	--	--
CC 50/20-11002	175	11		40	37	34	29	--
CC 50/20-11002	185	11		46	43	40	35	--
CC 50/20-15002	195	15		51	49	46	41	36
CC 50/20-15002	205	15		56	54	52	48	44
CC 50/20-18502	214	18.5		62	61	58	55	51

Performance curves

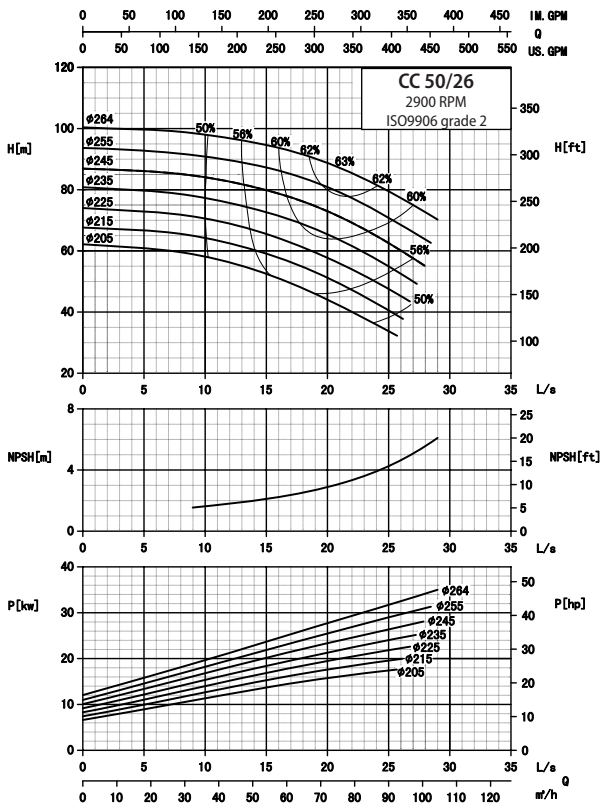

CC 50/26-2900

Installation sketch

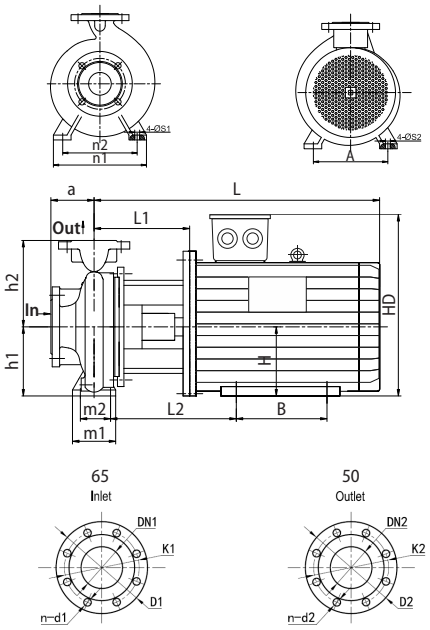

Dimensions -mm

DN1/DN2	32	40	50	65	80	100	125	150	200
D1/D2	140	150	165	185	200	220	250	285	340
K1/K2	100	110	125	145	160	180	210	240	295
n-d1/ n-d2	4-Φ18	4-Φ18	4-Φ18	4-Φ18	8-Φ18	8-Φ18	8-Φ18	8-Φ22	12-Φ22

Model	a	h1	h2	L1	L2	L	A	B	H	HD	m1	m2	n1	n2	S1	S2
CC 50/26-18502	100	180	225	229	287	789	254	254	160	420	125	95	320	250	14	15
CC 50/26-22002	100	180	225	229	300	819	279	241	180	455	125	95	320	250	14	15
CC 50/26-30002	100	180	225	232	315	892	318	305	200	505	125	95	320	250	14	19
CC 50/26-37002	100	180	225	232	315	892	318	305	200	505	125	95	320	250	14	19

Performance table

Model	Impeller Dia. [mm]	Motor size [kW]	Q [L/s]	10	15	20	22	25
CC 50/26-18502	205	18.5	H [m]	58	52	44	40	--
CC 50/26-18502	215	18.5		64	59	51	47	--
CC 50/26-22002	225	22		70	65	58	54	47
CC 50/26-30002	235	30		78	73	65	61	55
CC 50/26-30002	245	30		84	80	73	69	63
CC 50/26-30002	255	30		91	87	81	78	71
CC 50/26-37002	264	37		98	95	88	85	79

Performance curves

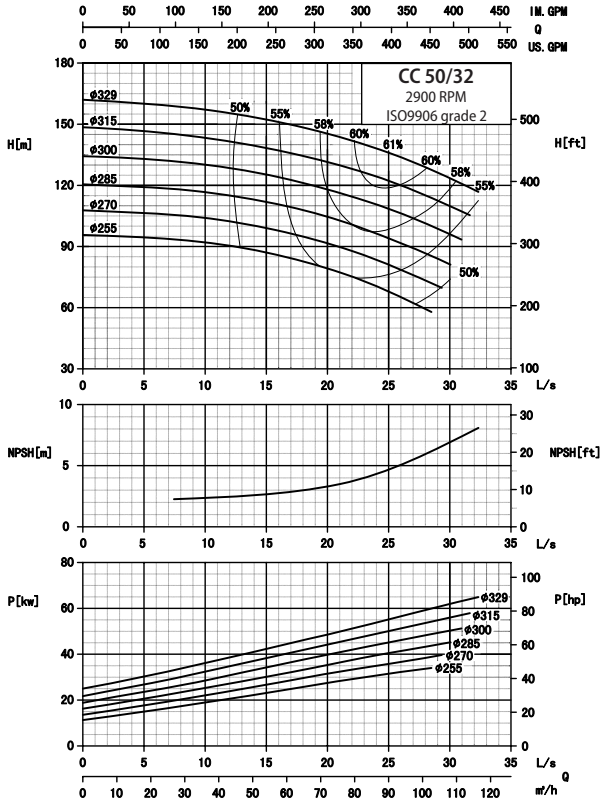

CC 50/32-2900

Installation sketch

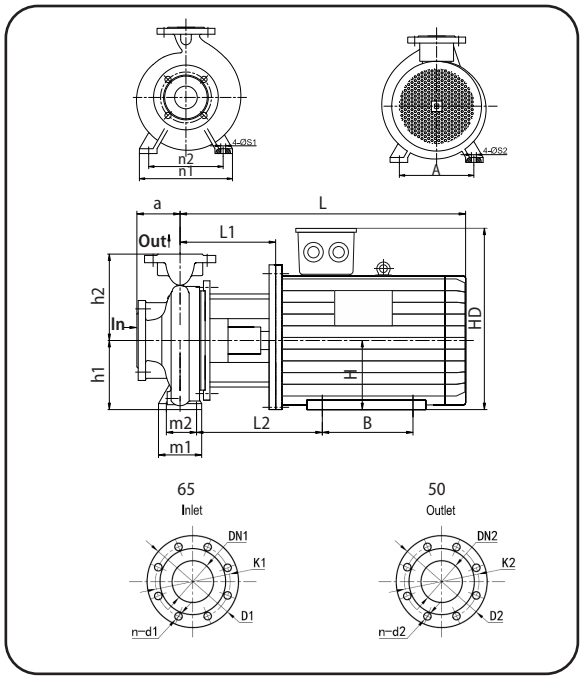

Dimensions -mm

DN1/DN2	32	40	50	65	80	100	125	150	200
D1/D2	140	150	165	185	200	220	250	285	340
K1/K2	100	110	125	145	160	180	210	240	295
n-d1/ n-d2	4-Φ18	4-Φ18	4-Φ18	4-Φ18	8-Φ18	8-Φ18	8-Φ18	8-Φ22	12-Φ22

Model	a	h1	h2	L1	L2	L	A	B	H	HD	m1	m2	n1	n2	S1	S2
CC 50/32-30002	125	225	280	237	323	897	318	305	200	505	125	95	345	280	18	19
CC 50/32-37002	125	225	280	237	323	897	318	305	200	505	125	95	345	280	18	19
CC 50/32-45002	125	225	280	237	339	942	356	311	225	560	125	95	345	280	18	19
CC 50/32-55002	125	225	280	273	394	1043	406	349	250	615	125	95	345	280	18	24
CC 50/32-75002	125	225	280	273	416	1118	457	368	280	680	125	95	345	280	18	24

Performance table

Model	Impeller Dia. [mm]	Motor size [kW]	Q [L/s]	10	15	20	25	30
CC 50/32-37002	255	37	H [m]	92	87	80	68	--
CC 50/32-45002	270	45		104	99	92	81	--
CC 50/32-45002	285	45		117	112	105	94	--
CC 50/32-55002	300	55		130	125	118	108	--
CC 50/32-75002	315	75		143	138	131	123	--
CC 50/32-75002	329	75		157	152	145	136	123

Performance curves

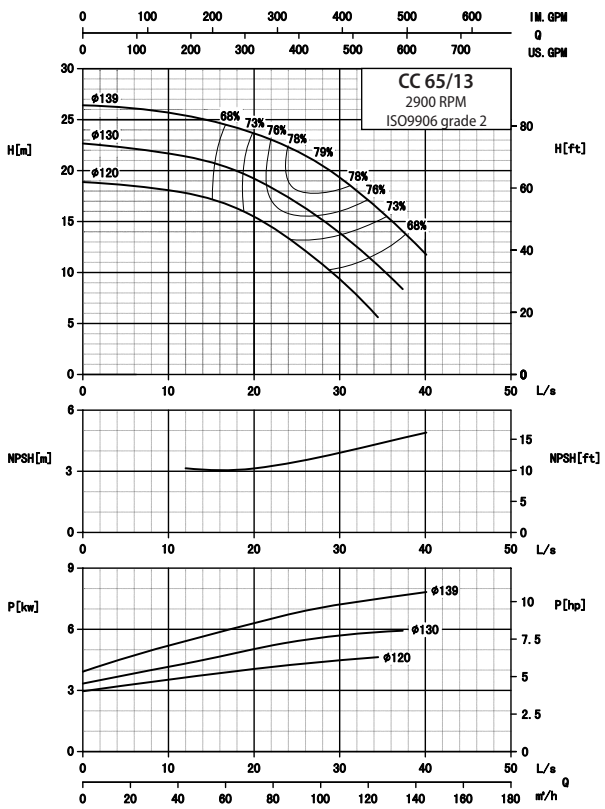

CC 65/13-2900

Installation sketch

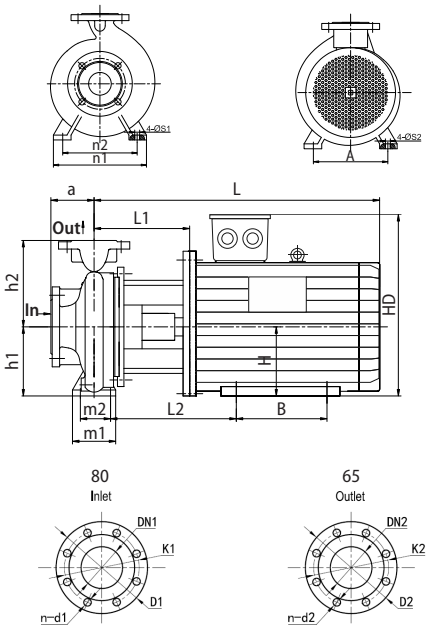

Dimensions -mm

DN1/DN2	32	40	50	65	80	100	125	150	200
D1/D2	140	150	165	185	200	220	250	285	340
K1/K2	100	110	125	145	160	180	210	240	295
n-d1/ n-d2	4-Φ18	4-Φ18	4-Φ18	4-Φ18	8-Φ18	8-Φ18	8-Φ18	8-Φ22	12-Φ22

Model	a	h1	h2	L1	L2	L	A	B	H	HD	m1	m2	n1	n2	S1	S2
CC 65/13-05502	100	160	180	187	229	577	216	140	132	345	125	95	280	212	14	12
CC 65/13-07502	100	160	180	187	229	577	216	140	132	345	125	95	280	212	14	12
CC 65/13-11002	100	160	180	220	281	725	254	210	160	420	125	95	280	212	14	15

Performance table

Model	Impeller Dia. [mm]	Motor size [kW]	Q [L/s]	15	20	25	30	35
CC 65/13-05502	120	5.5	H [m]	17.1	15.5	12.5	9.2	--
CC 65/13-07502	130	7.5		20.8	19.2	16.8	14	10
CC 65/13-11002	139	11		24.9	23.7	22	19.1	15.9

Performance curves

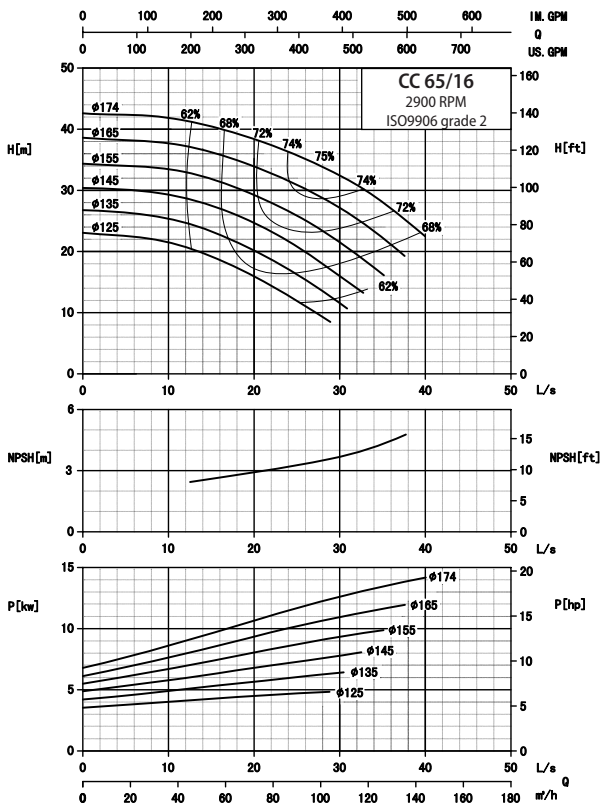

CC 65/16-2900

Installation sketch

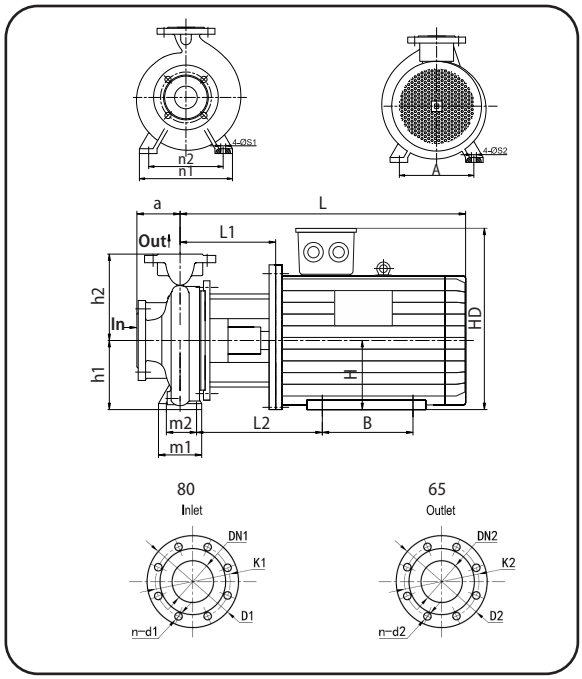

Dimensions -mm

DN1/DN2	32	40	50	65	80	100	125	150	200
D1/D2	140	150	165	185	200	220	250	285	340
K1/K2	100	110	125	145	160	180	210	240	295
n-d1/ n-d2	4-Φ18	4-Φ18	4-Φ18	4-Φ18	8-Φ18	8-Φ18	8-Φ18	8-Φ22	12-Φ22

Model	a	h1	h2	L1	L2	L	A	B	H	HD	m1	m2	n1	n2	S1	S2
CC 65/16-05502	100	160	200	187	229	577	215	140	132	345	125	95	280	212	14	12
CC 65/16-07502	100	160	200	187	229	577	215	140	132	345	125	95	280	212	14	12
CC 65/16-11002	100	160	200	220	281	725	254	210	160	420	125	95	280	212	14	15
CC 65/16-15002	100	160	200	220	281	725	254	210	160	420	125	95	280	212	14	15
CC 65/16-18502	100	160	200	220	281	780	254	254	160	420	125	95	280	212	14	15

Performance table

Model	Impeller Dia. [mm]	Motor size [kW]	Q [L/s]	15	20	25	30	35
CC 65/16-05502	125	5.5	H [m]	19	16	12	--	--
CC 65/16-07502	135	7.5		23.5	20	16	--	--
CC 65/16-11002	145	11		27.5	24.5	21	--	--
CC 65/16-11002	155	11		32	29.5	26	21.5	--
CC 65/16-15002	165	15		36	34	31	27	22.5
CC 65/16-15002	174	15		40.5	38	35.5	32.5	28

Performance curves

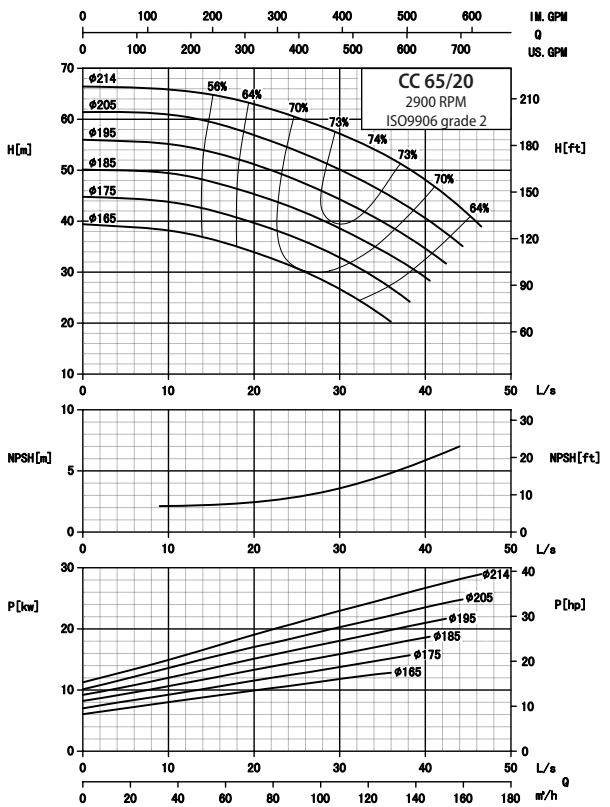

CC 65/20-2900

Installation sketch

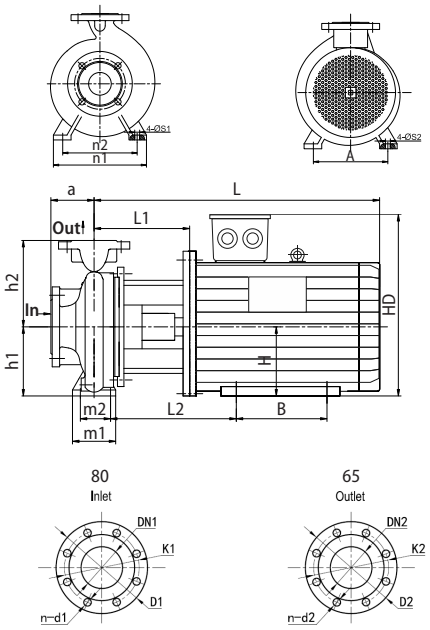

Dimensions -mm

DN1/DN2	32	40	50	65	80	100	125	150	200
D1/D2	140	150	165	185	200	220	250	285	340
K1/K2	100	110	125	145	160	180	210	240	295
n-d1/ n-d2	4-Φ18	4-Φ18	4-Φ18	4-Φ18	8-Φ18	8-Φ18	8-Φ18	8-Φ22	12-Φ22

Model	a	h1	h2	L1	L2	L	A	B	H	HD	m1	m2	n1	n2	S1	S2
CC 65/20-15002	100	180	225	218	279	723	254	210	160	420	125	95	320	250	14	15
CC 65/20-18502	100	180	225	218	279	778	254	254	160	420	125	95	320	250	14	15
CC 65/20-22002	100	180	225	218	292	808	279	241	180	455	125	95	320	250	14	15
CC 65/20-30002	100	180	225	221	307	881	318	305	200	505	125	95	320	250	14	19

Performance table

Model	Impeller Dia. [mm]	Motor size [kW]	Q [L/s]	10	15	20	30	40
CC 65/20-15002	165	15	H [m]	38	36.5	34	26.5	--
CC 65/20-18502	175	18.5		44	42	40	33	--
CC 65/20-22002	185	22		49.5	47.5	45.5	38	--
CC 65/20-22002	195	22		55	53.5	51	44	--
CC 65/20-30002	205	30		61	59.5	57	50	40
CC 65/20-30002	214	30		66	65	63	57	48

Performance curves

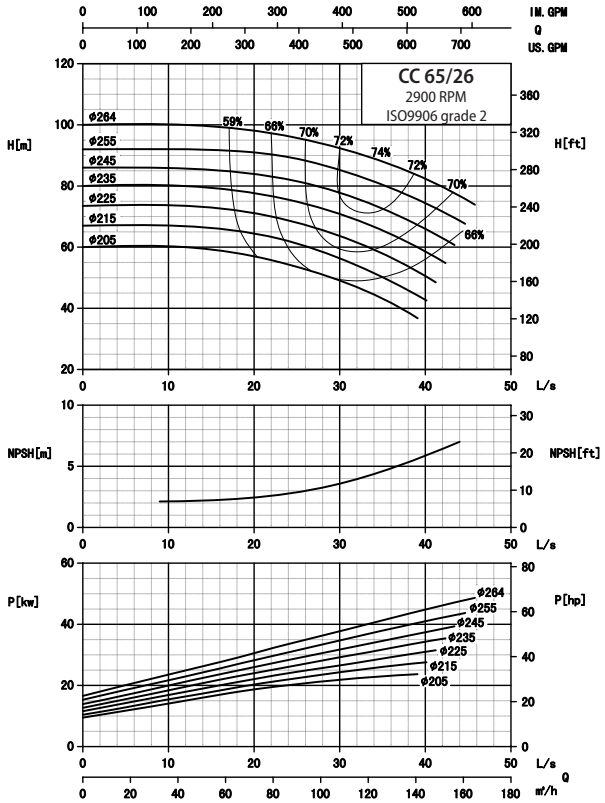

CC 65/26-2900

Installation sketch

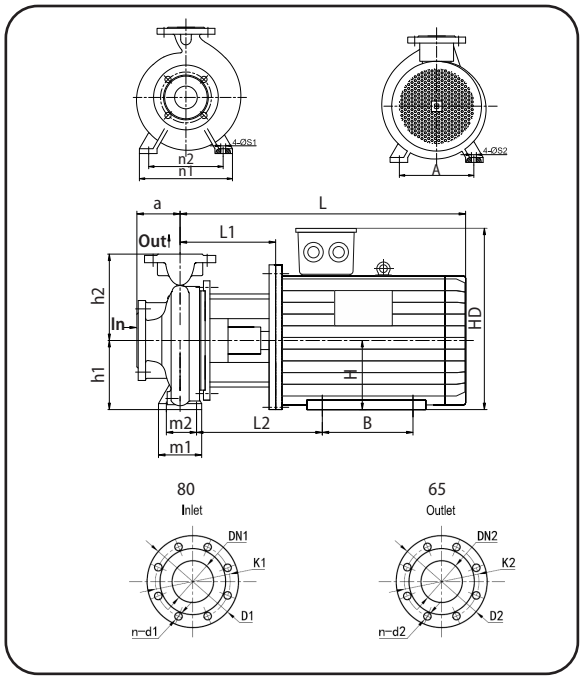

Dimensions -mm

DN1/DN2	32	40	50	65	80	100	125	150	200
D1/D2	140	150	165	185	200	220	250	285	340
K1/K2	100	110	125	145	160	180	210	240	295
n-d1/ n-d2	4-Φ18	4-Φ18	4-Φ18	4-Φ18	8-Φ18	8-Φ18	8-Φ18	8-Φ22	12-Φ22

Model	a	h1	h2	L1	L2	L	A	B	H	HD	m1	m2	n1	n2	S1	S2
CC 65/26-30002	100	200	250	237	310	897	318	305	200	505	160	120	360	280	18	19
CC 65/26-37002	100	200	250	237	310	897	318	305	200	505	160	120	360	280	18	19
CC 65/26-45002	100	200	250	237	326	942	356	311	225	560	160	120	360	280	18	19
CC 65/26-55002	100	200	250	271	379	1041	406	349	250	615	160	120	360	280	18	24

Performance table

Model	Impeller Dia. [mm]	Motor size [kW]	Q [L/s]	10	15	20	30	40
CC 65/26-30002	205	30	H [m]	60	59	57	49	--
CC 65/26-30002	215	30		67	66	64	56	--
CC 65/26-37002	225	37		74	73	71	64	--
CC 65/26-37002	235	37		80	79	78	71	59
CC 65/26-45002	245	45		86	85	84	78	66
CC 65/26-45002	255	45		93	92	91	85	74
CC 65/26-55002	264	55		100	99	98	93	82

Performance curves

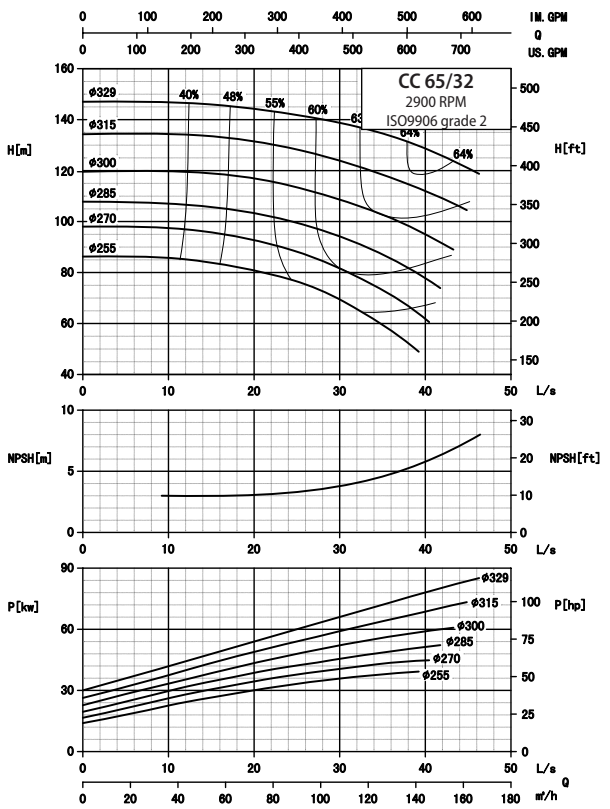

CC 65/32-2900

Installation sketch

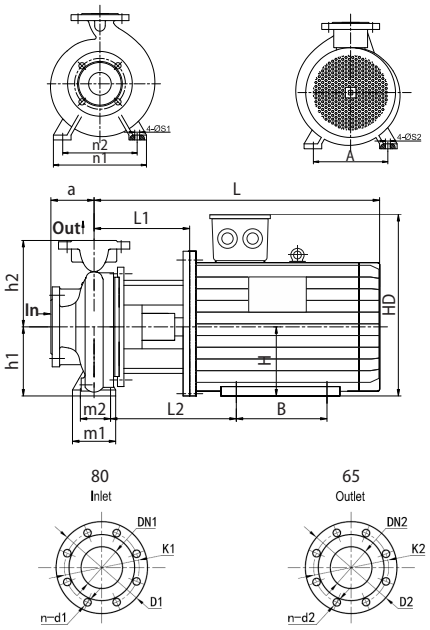

Dimensions -mm

DN1/DN2	32	40	50	65	80	100	125	150	200
D1/D2	140	150	165	185	200	220	250	285	340
K1/K2	100	110	125	145	160	180	210	240	295
n-d1/ n-d2	4-Φ18	4-Φ18	4-Φ18	4-Φ18	8-Φ18	8-Φ18	8-Φ18	8-Φ22	12-Φ22

Model	a	h1	h2	L1	L2	L	A	B	H	HD	m1	m2	n1	n2	S1	S2
CC 65/32-45002	125	225	280	252	341	957	356	311	225	560	160	120	400	315	18	19
CC 65/32-55002	125	225	280	272	380	1042	406	349	250	615	160	120	400	315	18	24
CC 65/32-75002	125	225	280	272	402	1117	457	368	280	680	160	120	400	315	18	24
CC 65/32-90002	125	225	280	272	402	1167	457	419	280	680	160	120	400	315	18	24

Performance table

Model	Impeller Dia. [mm]	Motor size [kW]	Q [L/s]	10	15	20	30	40
CC 65/32-45002	255	45	H [m]	86	84	81	70	--
CC 65/32-55002	270	55		98	96	93	82	--
CC 65/32-75002	285	75		107	106	103	94	--
CC 65/32-75002	300	75		120	119	117	108	95
CC 65/32-90002	315	90		135	133	131	124	112
CC 65/32-90002	329	90		147	146	144	138	129

Performance curves

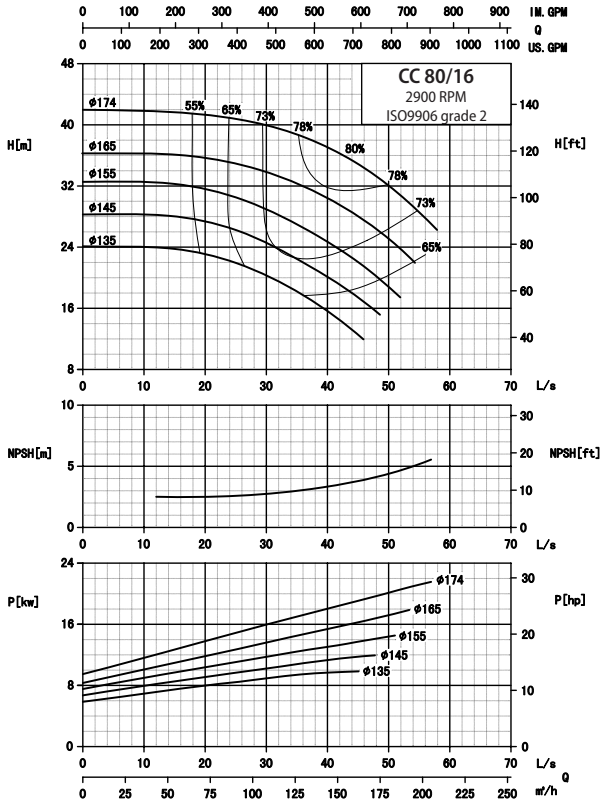

CC 80/16-2900

Installation sketch

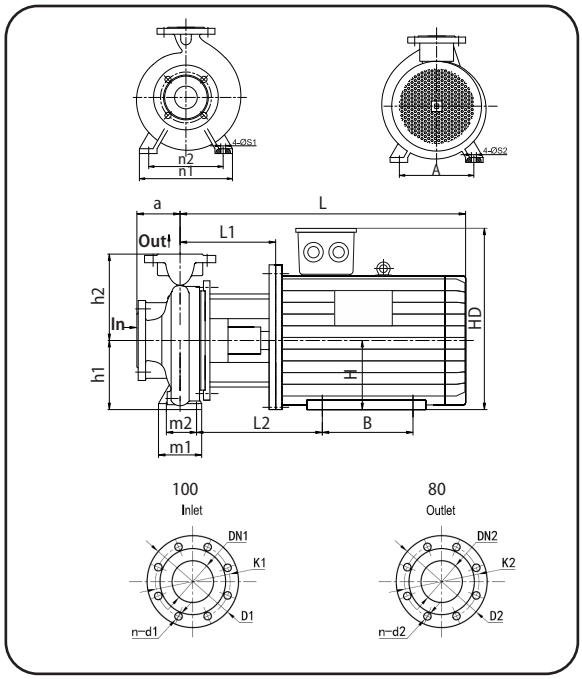

Dimensions -mm

DN1/DN2	32	40	50	65	80	100	125	150	200
D1/D2	140	150	165	185	200	220	250	285	340
K1/K2	100	110	125	145	160	180	210	240	295
n-d1/ n-d2	4-Φ18	4-Φ18	4-Φ18	4-Φ18	8-Φ18	8-Φ18	8-Φ18	8-Φ22	12-Φ22

Model	a	h1	h2	L1	L2	L	A	B	H	HD	m1	m2	n1	n2	S1	S2
CC 80/16-15002	125	180	225	220	281	725	254	210	160	420	125	95	320	250	14	15
CC 80/16-18502	125	180	225	220	281	780	254	254	160	420	125	95	320	250	14	15
CC 80/16-22002	125	180	225	220	294	810	279	241	180	455	125	95	320	250	14	15
CC 80/16-30002	125	180	225	222	305	839	318	305	200	505	125	95	320	250	14	19

Performance table

Model	Impeller Dia. [mm]	Motor size [kW]	Q [L/s]	15	20	30	40	50
CC 80/16-11002	135	11	H [m]	23.5	23	20	15.5	--
CC 80/16-15002	145	15		28	27.5	24.5	20	--
CC 80/16-18502	155	18.5		32.5	31.5	29	25	--
CC 80/16-22002	165	22		36	35.5	34	30.5	25
CC 80/16-30002	174	30		41.5	41.5	40	37	32

Performance curves

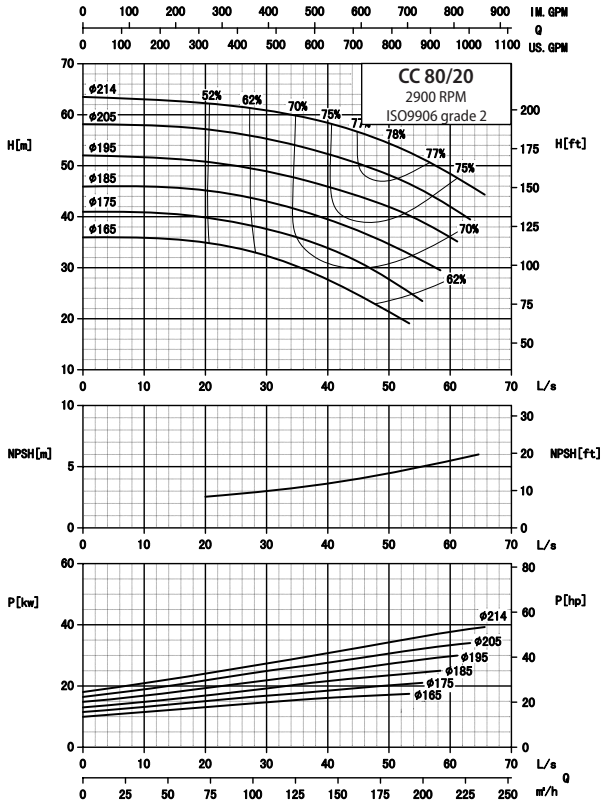

CC 80/20-2900

Installation sketch

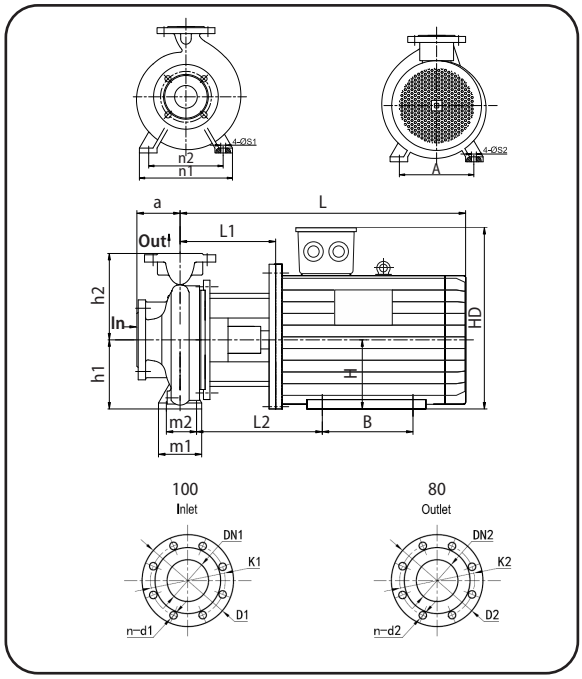

Dimensions -mm

DN1/DN2	32	40	50	65	80	100	125	150	200
D1/D2	140	150	165	185	200	220	250	285	340
K1/K2	100	110	125	145	160	180	210	240	295
n-d1/ n-d2	4-Φ18	4-Φ18	4-Φ18	4-Φ18	8-Φ18	8-Φ18	8-Φ18	8-Φ22	12-Φ22

Model	a	h1	h2	L1	L2	L	A	B	H	HD	m1	m2	n1	n2	S1	S2
CC 80/20-22002	125	180	250	234	295	824	279	241	180	455	125	95	345	280	14	15
CC 80/20-30002	125	180	250	237	323	897	318	305	200	505	125	95	345	280	14	19
CC 80/20-37002	125	180	250	237	323	897	318	305	200	505	125	95	345	280	14	19
CC 80/20-45002	125	180	250	237	339	942	356	311	225	560	125	95	345	280	14	19

Performance table

Model	Impeller Dia. [mm]	Motor size [kW]	Q [L/s]	20	30	40	50	60
CC 80/20-22002	165	22	H [m]	35	32	28	21.5	--
CC 80/20-30002	175	30		40	37.5	34	28	--
CC 80/20-30002	185	30		45.5	43	39.5	34.5	--
CC 80/20-37002	195	37		51	49	46	42	--
CC 80/20-37002	205	37		57	55.5	52	48	42
CC 80/20-45002	214	45		62	61	58	54	48

Performance curves

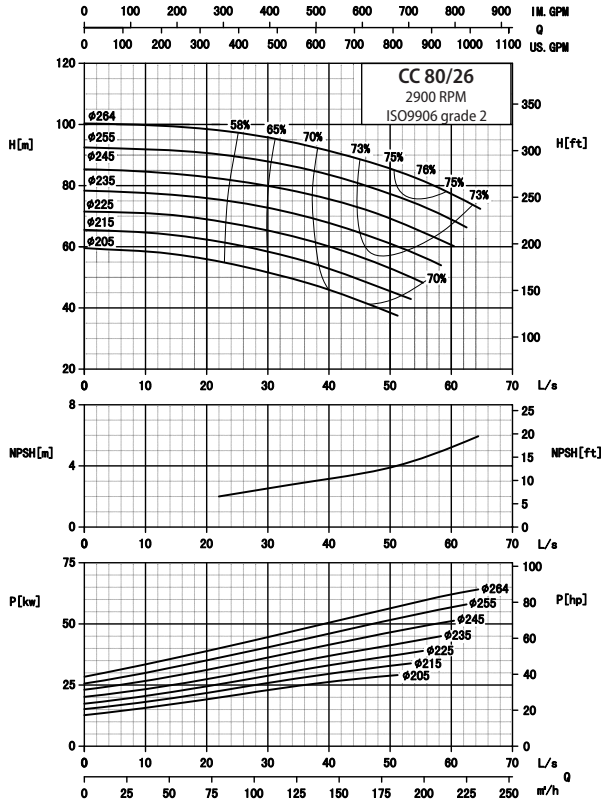

CC 80/26-2900

Installation sketch

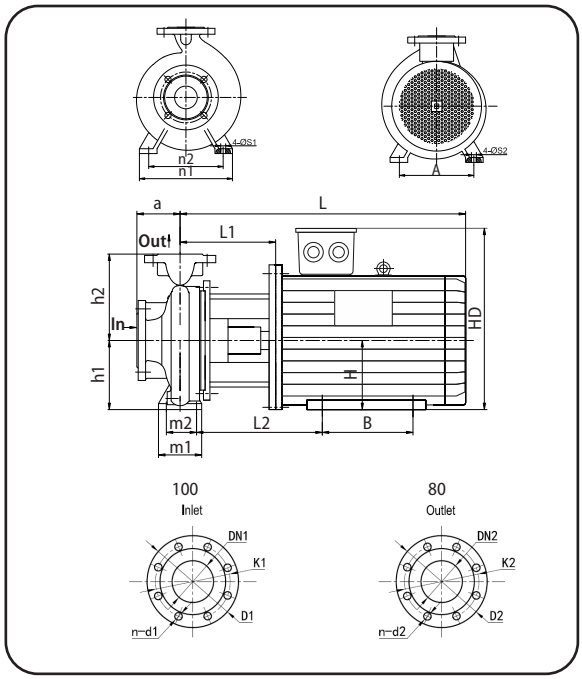

Dimensions -mm

DN1/DN2	32	40	50	65	80	100	125	150	200
D1/D2	140	150	165	185	200	220	250	285	340
K1/K2	100	110	125	145	160	180	210	240	295
n-d1/ n-d2	4-Φ18	4-Φ18	4-Φ18	4-Φ18	8-Φ18	8-Φ18	8-Φ18	8-Φ22	12-Φ22

Model	a	h1	h2	L1	L2	L	A	B	H	HD	m1	m2	n1	n2	S1	S2
CC 80/26-37002	125	200	280	237	310	897	318	305	200	505	160	120	400	315	18	19
CC 80/26-45002	125	200	280	237	326	942	356	311	225	560	160	120	400	315	18	19
CC 80/26-55002	125	200	280	271	379	1041	406	346	250	615	160	120	400	315	18	24
CC 80/26-75002	125	200	280	271	401	1116	457	368	280	680	160	120	400	315	18	24

Performance table

Model	Impeller Dia. [mm]	Motor size [kW]	Q [L/s]	25	30	40	50	60
CC 80/26-37002	205	37	H [m]	54	52	46	--	--
CC 80/26-37002	215	37		61	58	53	--	--
CC 80/26-45002	225	45		67	65	60	53	--
CC 80/26-55002	235	55		74	73	68	61	--
CC 80/26-55002	245	55		82	80	75	69	--
CC 80/26-75002	255	75		89	88	83	77	--
CC 80/26-75002	264	75		97	96	92	85	78

Performance curves

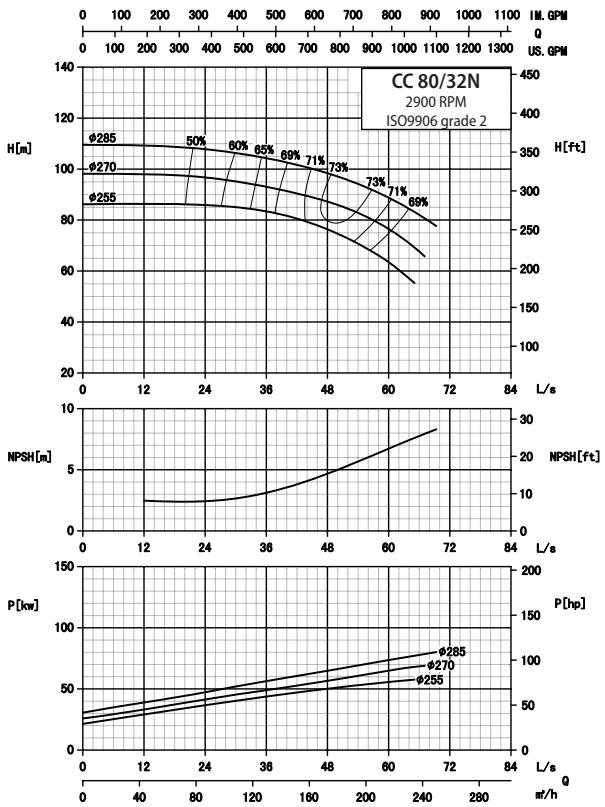

CC 80/32N-2900

Installation sketch

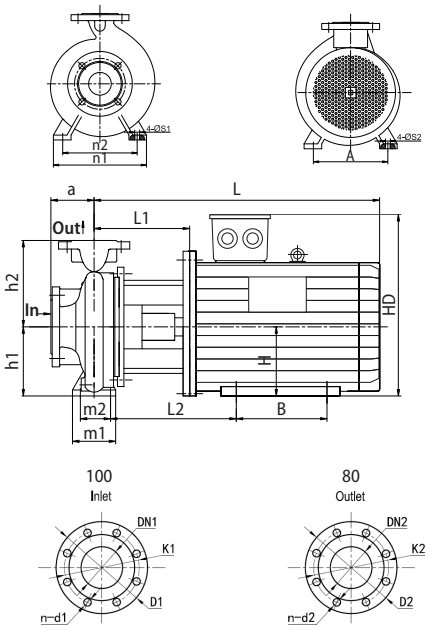

Dimensions -mm

DN1/DN2	32	40	50	65	80	100	125	150	200
D1/D2	140	150	165	185	200	220	250	285	340
K1/K2	100	110	125	145	160	180	210	240	295
n-d1/ n-d2	4-Φ18	4-Φ18	4-Φ18	4-Φ18	8-Φ18	8-Φ18	8-Φ18	8-Φ22	12-Φ22

Model	a	h1	h2	L1	L2	L	A	B	H	HD	m1	m2	n1	n2	S1	S2
CC 80/32-75002	125	250	315	272	402	1117	457	368	280	680	160	120	400	315	18	24
CC 80/32-90002	125	250	315	272	402	1167	457	419	280	680	160	120	400	315	18	24

Performance table

Model	Impeller Dia. [mm]	Motor size [kW]	Q [L/s]	20	30	40	50	60
CC 80/32N-75002	255	75	H [m]	86	85	82	75	64
CC 80/32N-75002	270	75		98	95	92	86	77
CC 80/32N-90002	285	90		108	106	102	97	89

Performance curves

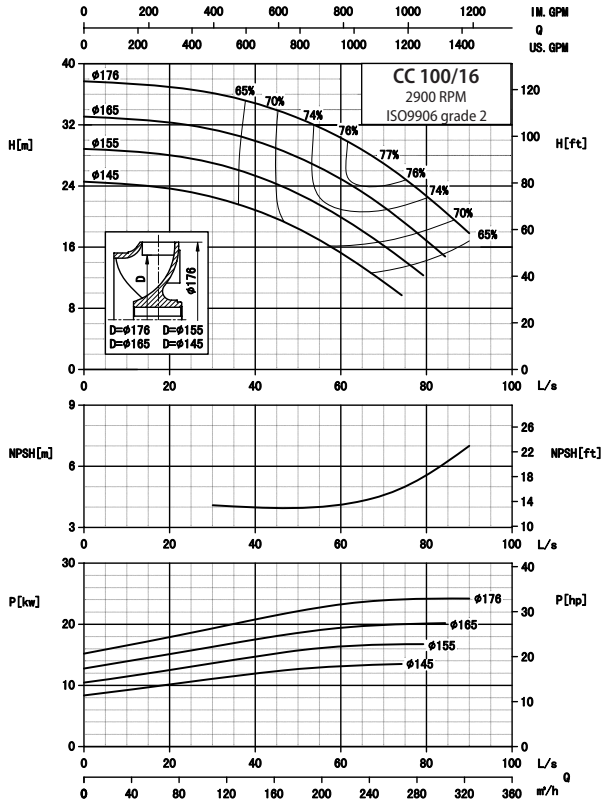

CC 100/16-2900

Installation sketch

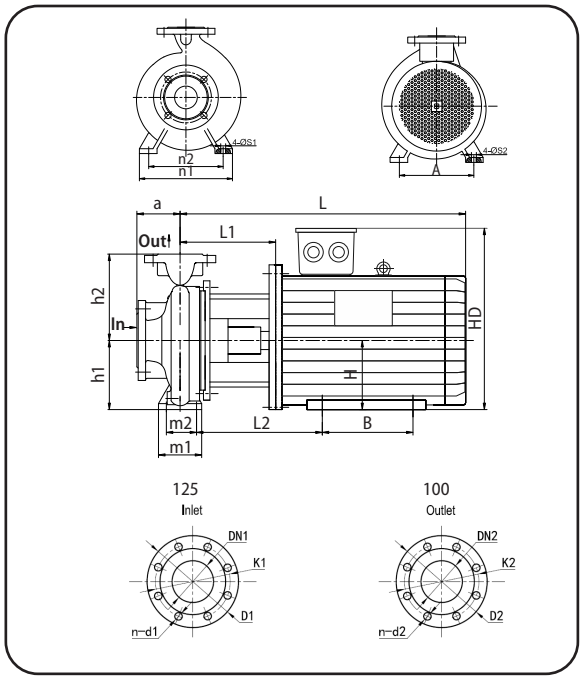

Dimensions -mm

DN1/DN2	32	40	50	65	80	100	125	150	200
D1/D2	140	150	165	185	200	220	250	285	340
K1/K2	100	110	125	145	160	180	210	240	295
n-d1/ n-d2	4-Φ18	4-Φ18	4-Φ18	4-Φ18	8-Φ18	8-Φ18	8-Φ18	8-Φ22	12-Φ22

Model	a	h1	h2	L1	L2	L	A	B	H	HD	m1	m2	n1	n2	S1	S2
CC 100/16-15502	125	200	250	246	294	751	254	210	160	420	160	120	360	280	18	15
CC 100/16-18502	125	200	250	246	294	806	254	241	160	420	160	120	360	280	18	15
CC 100/16-22002	125	200	250	246	307	836	279	241	180	455	160	120	360	280	18	15
CC 100/16-30002	125	200	250	249	322	909	318	305	200	505	160	120	360	280	18	19

Performance table

Model	Impeller Dia. [mm]	Motor size [kW]	Q [L/s]	40	50	60	70	80
CC 100/16-15002	145	15	H [m]	21	18.5	15.5	--	--
CC 100/16-18502	155	18.5		25.5	23	20	16	--
CC 100/16-22002	165	22		30	28	25	21.5	--
CC 100/16-30002	176	30		35	33	30	27	22.5

Performance curves

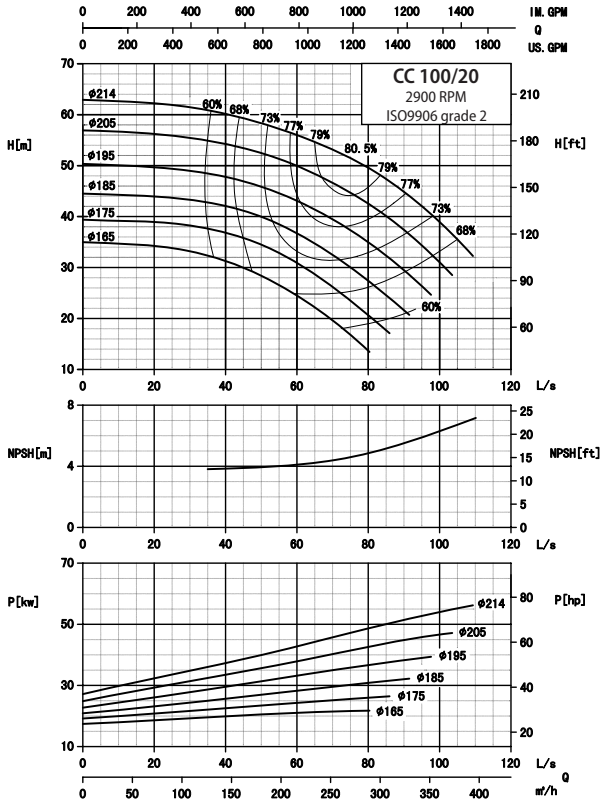

CC 100/20-2900

Installation sketch

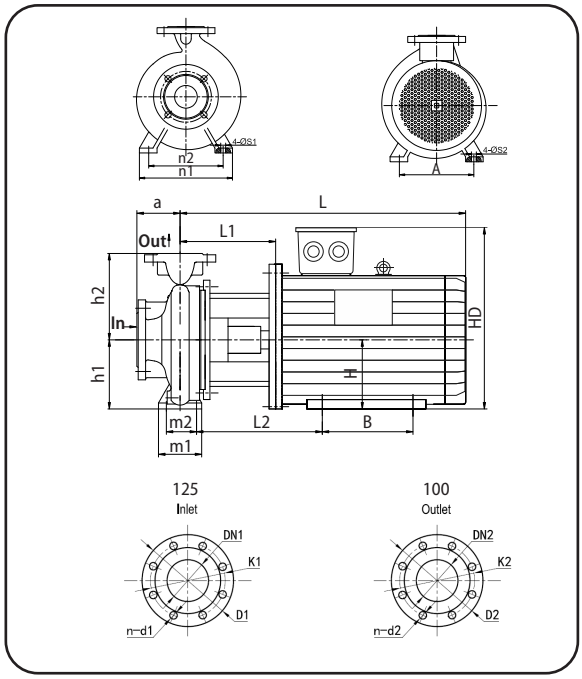

Dimensions -mm

DN1/DN2	32	40	50	65	80	100	125	150	200
D1/D2	140	150	165	185	200	220	250	285	340
K1/K2	100	110	125	145	160	180	210	240	295
n-d1/ n-d2	4-Φ18	4-Φ18	4-Φ18	4-Φ18	8-Φ18	8-Φ18	8-Φ18	8-Φ22	12-Φ22

Model	a	h1	h2	L1	L2	L	A	B	H	HD	m1	m2	n1	n2	S1	S2
CC 100/20-30002	125	200	280	237	310	897	318	305	200	505	160	120	360	280	18	19
CC 100/20-37002	125	200	280	237	310	897	318	305	200	505	160	120	360	280	18	19
CC 100/20-45002	125	200	280	237	310	942	356	311	225	560	160	120	360	280	18	19
CC 100/20-55002	125	200	280	271	379	1041	406	349	250	615	160	120	360	280	18	24
CC 100/20-75002	125	200	280		401	1116	457	368	280	680	160	120	360	280	18	24

Performance table

Model	Impeller Dia. [mm]	Motor size [kW]	Q [L/s]	40	60	80	90	100
CC 100/20-30002	165	30	H [m]	31.5	24	--	--	--
CC 100/20-30002	175	30		37	31	20	--	--
CC 100/20-37002	185	37		42	37	27.5	--	--
CC 100/20-45002	195	45		48	43	35	29	--
CC 100/20-55002	205	55		54	50	42.5	37.5	--
CC 100/20-75002	214	75		60	56	49.5	45	39

Performance curves

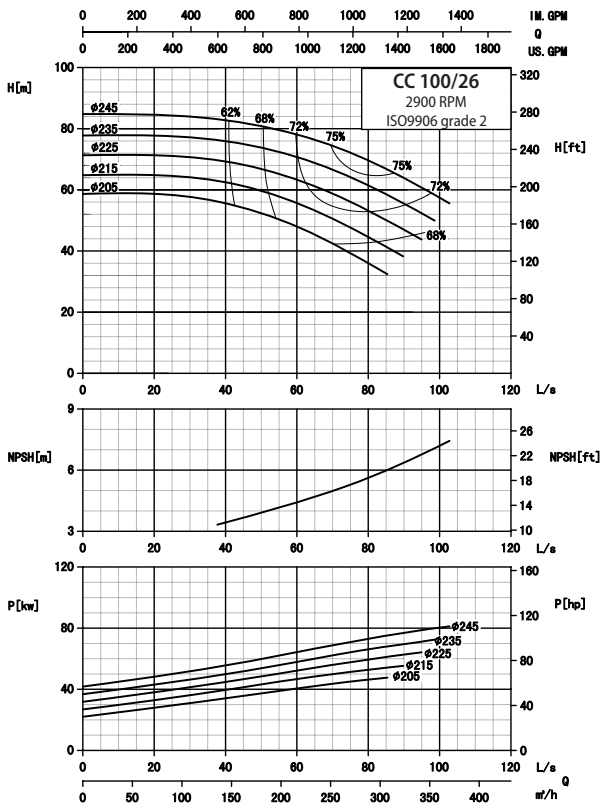

CC 100/26-2900

Installation sketch

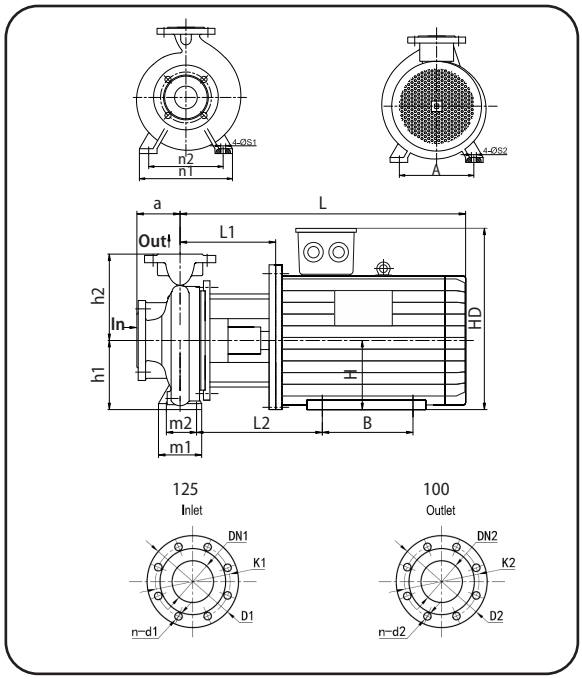

Dimensions -mm

DN1/DN2	32	40	50	65	80	100	125	150	200
D1/D2	140	150	165	185	200	220	250	285	340
K1/K2	100	110	125	145	160	180	210	240	295
n-d1/ n-d2	4-Φ18	4-Φ18	4-Φ18	4-Φ18	8-Φ18	8-Φ18	8-Φ18	8-Φ22	12-Φ22

Model	a	h1	h2	L1	L2	L	A	B	H	HD	m1	m2	n1	n2	S1	S2
CC 100/26-55002	140	225	280	275	383	1045	406	349	250	615	160	120	400	315	18	24
CC 100/26-75002	140	225	280	275	405	1120	457	368	280	680	160	120	400	315	18	24
CC 100/26-90002	140	225	280	275	405	1170	457	419	280	680	160	120	400	315	18	24

Performance table

Model	Impeller Dia. [mm]	Motor size [kW]	Q [L/s]	40	60	70	80	90
CC 100/26-55002	205	55	H [m]	56	48	43	--	--
CC 100/26-75002	215	75		63	56	50	44	--
CC 100/26-75002	225	75		69	64	59	53	--
CC 100/26-75002	235	75		76	71	66	62	55
CC 100/26-90002	245	90		83	78	75	70	64

Performance curves

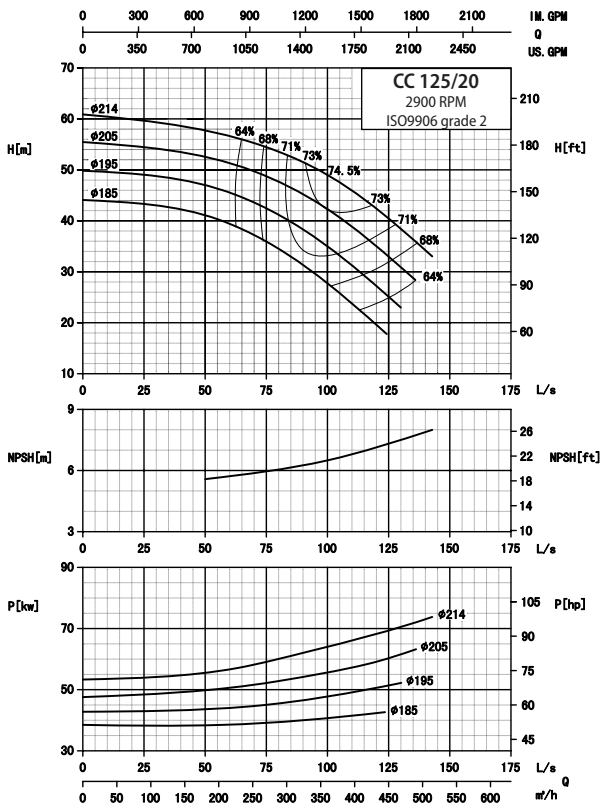

CC 125/20-2900

Installation sketch

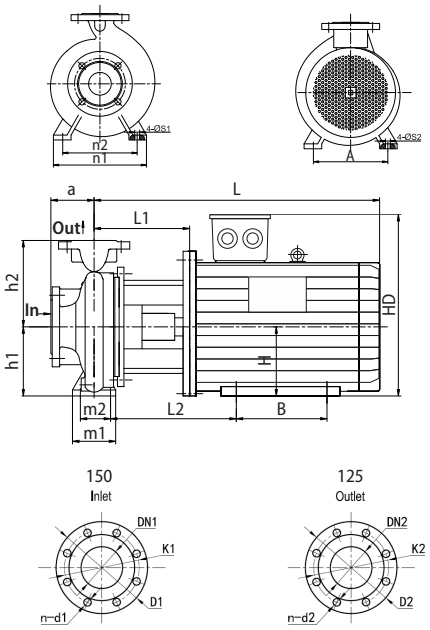

Dimensions -mm

DN1/DN2	32	40	50	65	80	100	125	150	200
D1/D2	140	150	165	185	200	220	250	285	340
K1/K2	100	110	125	145	160	180	210	240	295
n-d1/ n-d2	4-Φ18	4-Φ18	4-Φ18	4-Φ18	8-Φ18	8-Φ18	8-Φ18	8-Φ22	12-Φ22

Model	a	h1	h2	L1	L2	L	A	B	H	HD	m1	m2	n1	n2	S1	S2
CC 125/20-45002	140	250	315	238	327	943	356	311	225	560	160	120	400	315	18	24
CC 125/20-55002	140	250	315	271	380	1042	406	349	250	615	160	120	400	315	18	24
CC 125/20-75002	140	250	315	271	401	1116	457	368	280	680	160	120	400	315	18	24
CC 125/20-90002	140	250	315	271	401	1166	457	419	280	680	160	120	400	315	18	24

Performance table

Model	Impeller Dia. [mm]	Motor size [kW]	Q [L/s]	50	60	75	100	125
CC 125/20-45002	185	45	H [m]	41	39.5	36	38	--
CC 125/20-55002	195	55		57	46	42	35	--
CC 125/20-75002	205	75		52.5	51.5	48.5	42	33
CC 125/20-90002	214	90		58	56.5	54.5	49	40

Performance curves

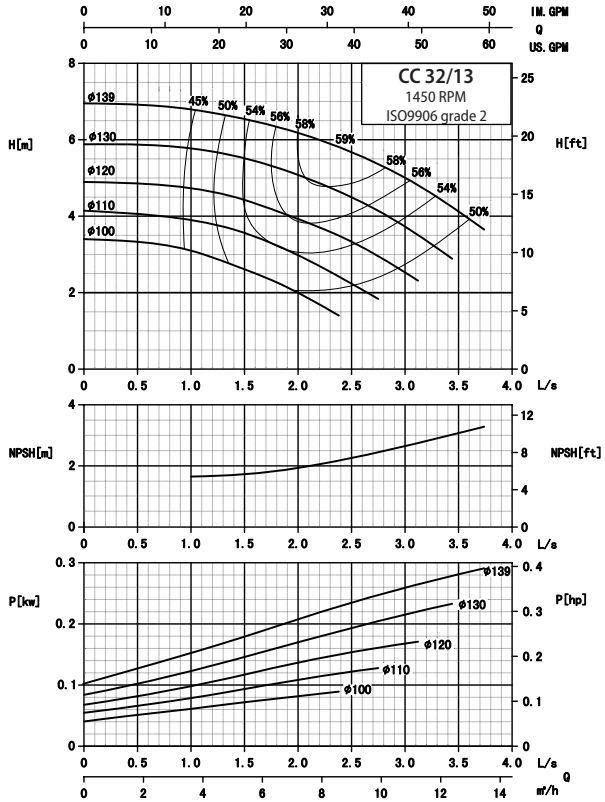

CC 32/13-1450

Installation sketch

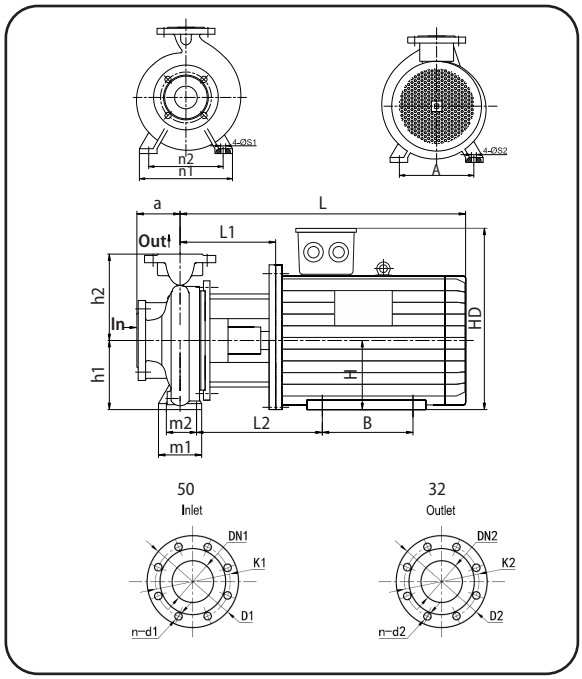

Dimensions -mm

DN1/DN2	32	40	50	65	80	100	125	150	200
D1/D2	140	150	165	185	200	220	250	285	340
K1/K2	100	110	125	145	160	180	210	240	295
n-d1/ n-d2	4-Φ18	4-Φ18	4-Φ18	4-Φ18	8-Φ18	8-Φ18	8-Φ18	8-Φ22	12-Φ22

Model	a	h1	h2	L1	L2	L	A	B	H	HD	m1	m2	n1	n2	S1	S2
CC 32/13-00554	80	112	140	152	167	407	125	100	80	220	100	70	190	140	14	10

Performance table

Model	Impeller Dia. [mm]	Motor size [kW]	Q [L/s]	1.5	2	2.5	3	3.5
CC 32/13-00554	100	0.55	H [m]	2.6	2	--	--	--
CC 32/13-00554	110	0.55		3.5	3	2.3	--	--
CC 32/13-00554	120	0.55		4.4	3.9	3.3	--	--
CC 32/13-00554	130	0.55		5.5	5.1	4.5	3.8	--
CC 32/13-00554	139	0.55		6.5	6.2	5.7	5	4.1

Performance curves

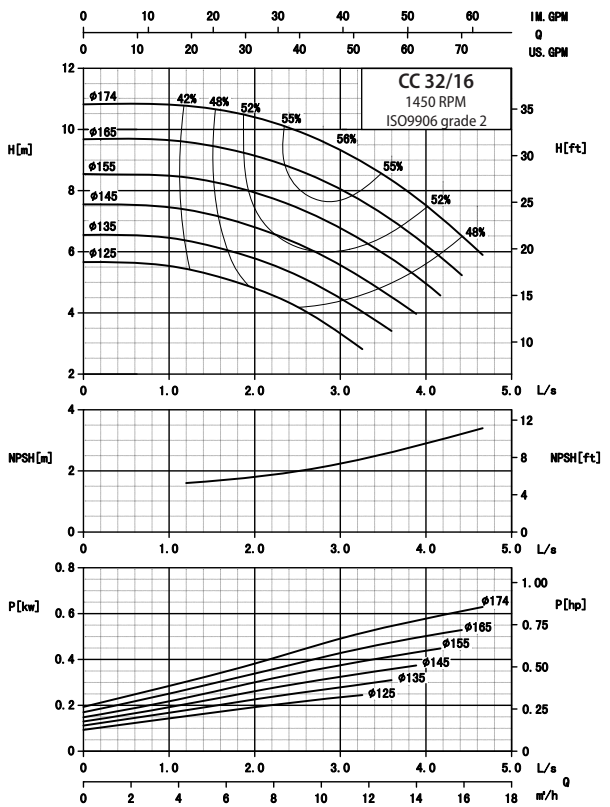

CC 32/16-1450

Installation sketch

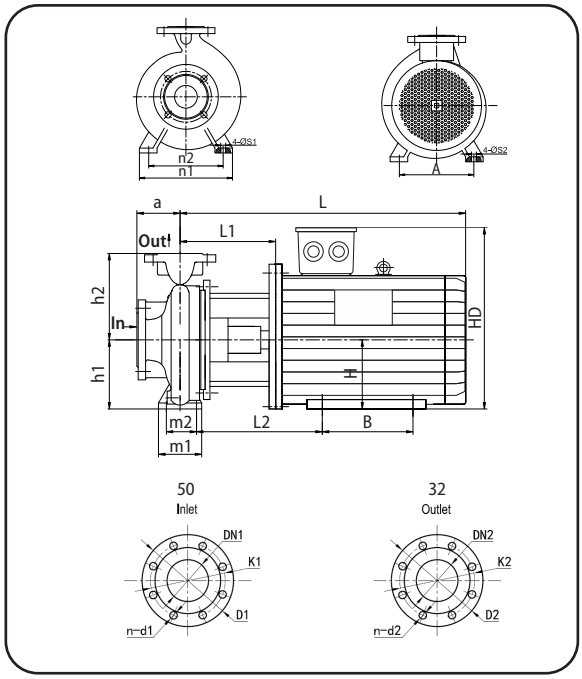

Dimensions -mm

DN1/DN2	32	40	50	65	80	100	125	150	200
D1/D2	140	150	165	185	200	220	250	285	340
K1/K2	100	110	125	145	160	180	210	240	295
n-d1/ n-d2	4-Φ18	4-Φ18	4-Φ18	4-Φ18	8-Φ18	8-Φ18	8-Φ18	8-Φ22	12-Φ22

Model	a	h1	h2	L1	L2	L	A	B	H	HD	m1	m2	n1	n2	S1	S2
CC 32/16-00554	80	132	160	152	167	407	125	100	80	220	100	70	240	190	14	10
CC 32/16-00754	80	132	160	152	167	407	125	100	80	220	100	70	240	190	14	10

Performance table

Model	Impeller Dia. [mm]	Motor size [kW]	Q [L/s]	1.5	2	2.5	3	4
CC 32/16-00554	125	0.55	H [m]	5.3	4.8	4	--	--
CC 32/16-00554	135	0.55		6.2	5.7	5.1	4.5	--
CC 32/16-00554	145	0.55		7.2	6.8	6.3	5.5	--
CC 32/16-00554	155	0.55		8.3	7.9	7.4	6.8	--
CC 32/16-00554	165	0.55		9.5	9.1	8.7	8	6.2
CC 32/16-00754	174	0.75		10.7	10.3	10	9.3	7.5

Performance curves

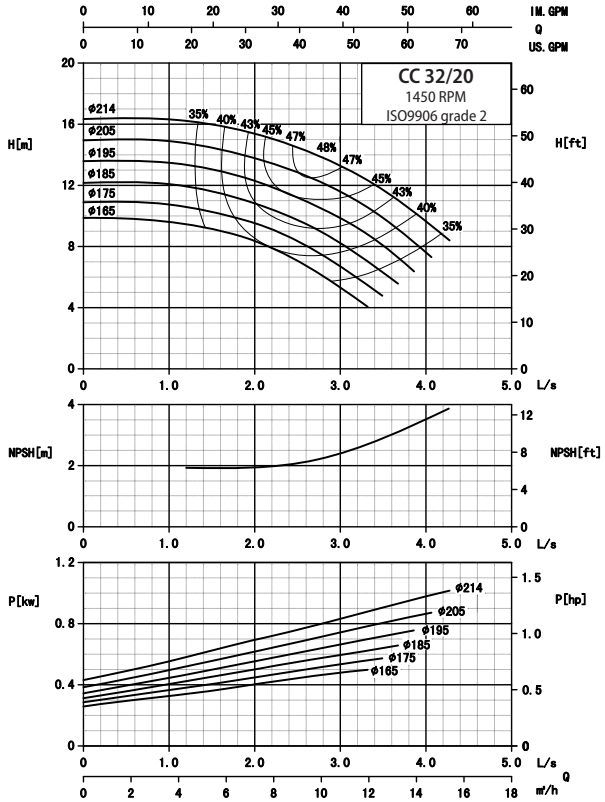

CC 32/20-1450

Installation sketch

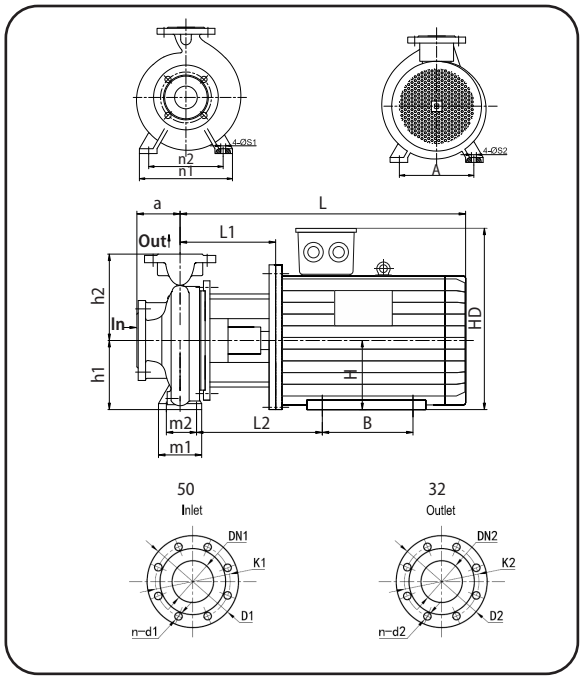

Dimensions -mm

DN1/DN2	32	40	50	65	80	100	125	150	200
D1/D2	140	150	165	185	200	220	250	285	340
K1/K2	100	110	125	145	160	180	210	240	295
n-d1/ n-d2	4-Φ18	4-Φ18	4-Φ18	4-Φ18	8-Φ18	8-Φ18	8-Φ18	8-Φ22	12-Φ22

Model	a	h1	h2	L1	L2	L	A	B	H	HD	m1	m2	n1	n2	S1	S2
CC 32/20-00554	80	160	180	151	166	406	125	100	80	220	100	70	240	190	14	10
CC 32/20-00754	80	160	180	151	166	406	125	100	80	220	100	70	240	190	14	10
CC 32/20-01104	80	160	180	151	172	421	140	100	90	250	100	70	240	190	14	10
CC 32/20-01504	80	160	180	151	172	447	140	125	90	250	100	70	240	190	14	10

Performance table

Model	Impeller Dia. [mm]	Motor size [kW]	Q [L/s]	1.5	2	2.5	3	4
CC 32/20-00554	165	0.55	H [m]	9.1	8.3	7	5.2	--
CC 32/20-00554	175	0.55		10.2	9.6	8.5	6.8	--
CC 32/20-00754	185	0.75		11.6	10.9	9.7	8.1	--
CC 32/20-00754	195	0.75		13	12.2	11.1	10	--
CC 32/20-01104	205	1.1		14.5	13.8	12.9	11.6	--
CC 32/20-01104	214	1.1		16	15.4	14.5	13.2	9.8

Performance curves

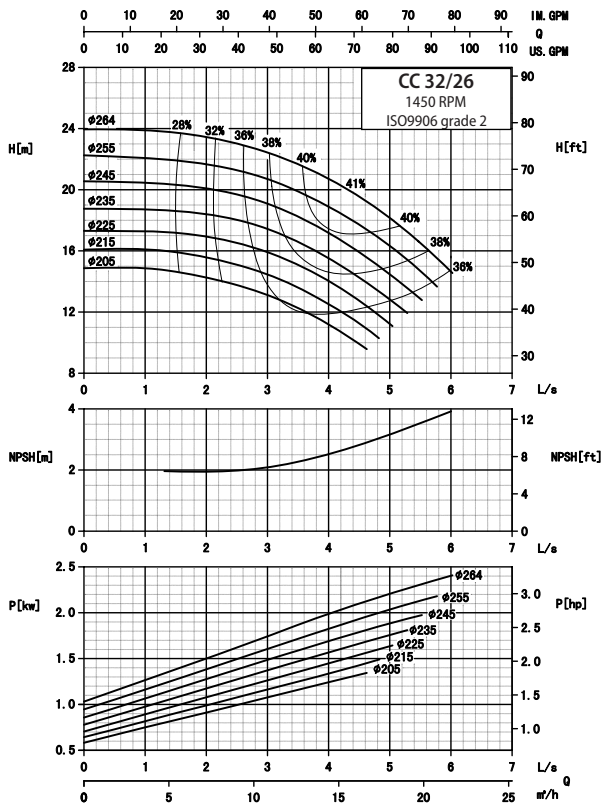

CC 32/26-1450

Installation sketch

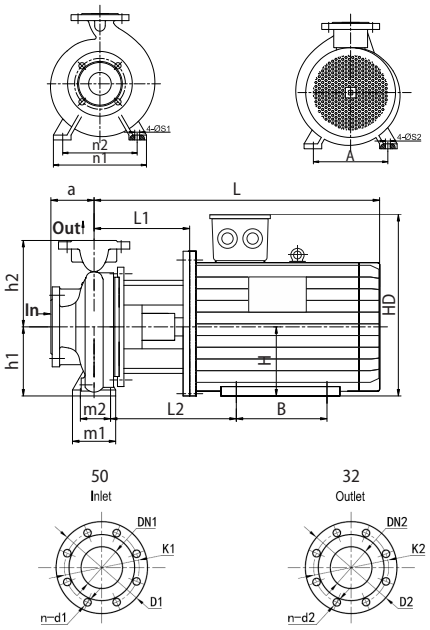

Dimensions -mm

DN1/DN2	32	40	50	65	80	100	125	150	200
D1/D2	140	150	165	185	200	220	250	285	340
K1/K2	100	110	125	145	160	180	210	240	295
n-d1/ n-d2	4-Φ18	4-Φ18	4-Φ18	4-Φ18	8-Φ18	8-Φ18	8-Φ18	8-Φ22	12-Φ22

Model	a	h1	h2	L1	L2	L	A	B	H	HD	m1	m2	n1	n2	S1	S2
CC 32/26-02204	100	180	225	173	187	498	160	140	100	270	125	95	320	225	14	12
CC 32/26-03004	100	180	225	173	187	498	160	140	100	270	125	95	320	225	14	12

Performance table

Model	Impeller Dia. [mm]	Motor size [kW]	Q [L/s]	2	3	4	5	5.5
CC 32/26-02204	205	2.2	H [m]	14.2	13.1	11.1	--	--
CC 32/26-02204	215	2.2		15.7	14.5	12.5	--	--
CC 32/26-02204	225	2.2		17	15.9	14	--	--
CC 32/26-02204	235	2.2		18.5	17.5	15.6	--	--
CC 32/26-02204	245	2.2		20	19	17.1	14.5	--
CC 32/26-02204	255	2.2		21.8	20.8	19	16.2	14.8
CC 32/26-03004	264	3		23.5	22.5	20.8	18	16.4

Performance curves

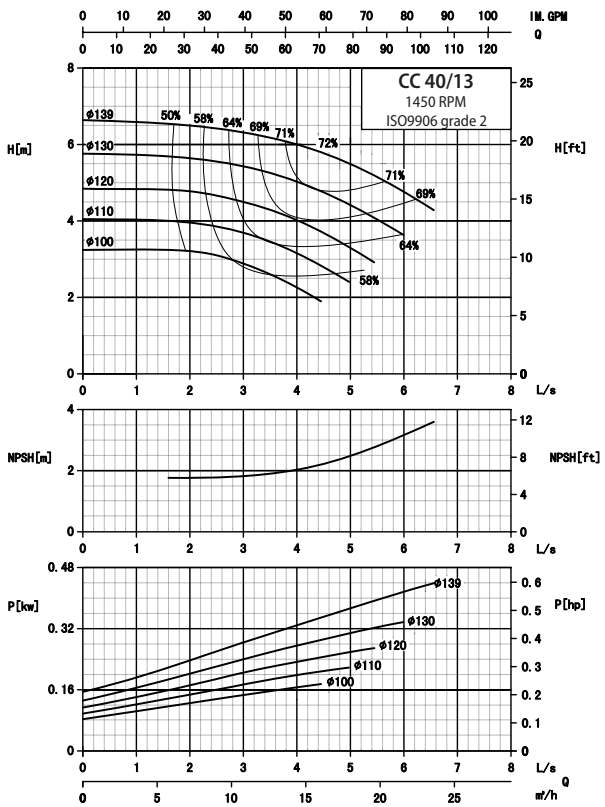

CC 40/13-1450

Installation sketch

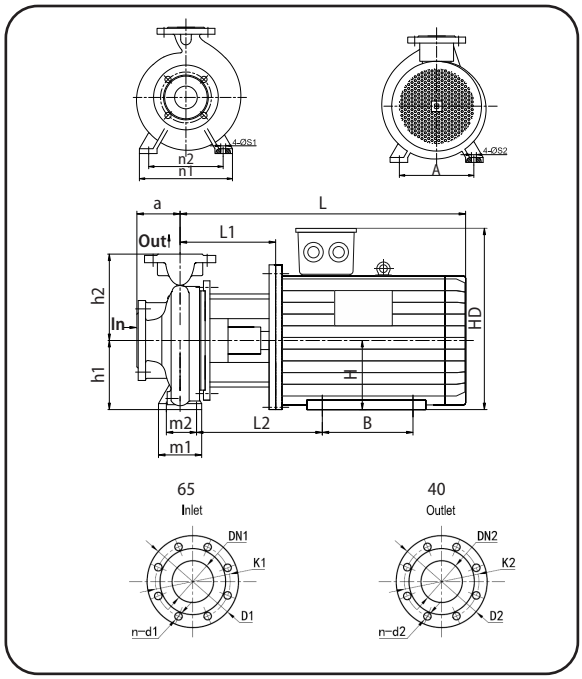

Dimensions -mm

DN1/DN2	32	40	50	65	80	100	125	150	200
D1/D2	140	150	165	185	200	220	250	285	340
K1/K2	100	110	125	145	160	180	210	240	295
n-d1/ n-d2	4-Φ18	4-Φ18	4-Φ18	4-Φ18	8-Φ18	8-Φ18	8-Φ18	8-Φ22	12-Φ22

Model	a	h1	h2	L1	L2	L	A	B	H	HD	m1	m2	n1	n2	S1	S2
CC 40/13-00554	80	112	140	152	167	407	125	100	80	220	100	70	210	160	14	10
CC 40/13-00754	80	112	140	152	167	407	125	100	80	220	100	70	210	160	14	10

Performance table

Model	Impeller Dia. [mm]	Motor size [kW]	Q [L/s]	2	3	4	5	6
CC 40/13-00554	100	0.55	H [m]	3.2	2.8	2.3	--	--
CC 40/13-00554	110	0.55		4	3.7	3.2	--	--
CC 40/13-00554	120	0.55		4.8	4.5	4	3.3	--
CC 40/13-00554	130	0.55		5.6	5.4	5	4.4	--
CC 40/13-00554	139	0.55		6.5	6.3	6	5.5	4.8

Performance curves

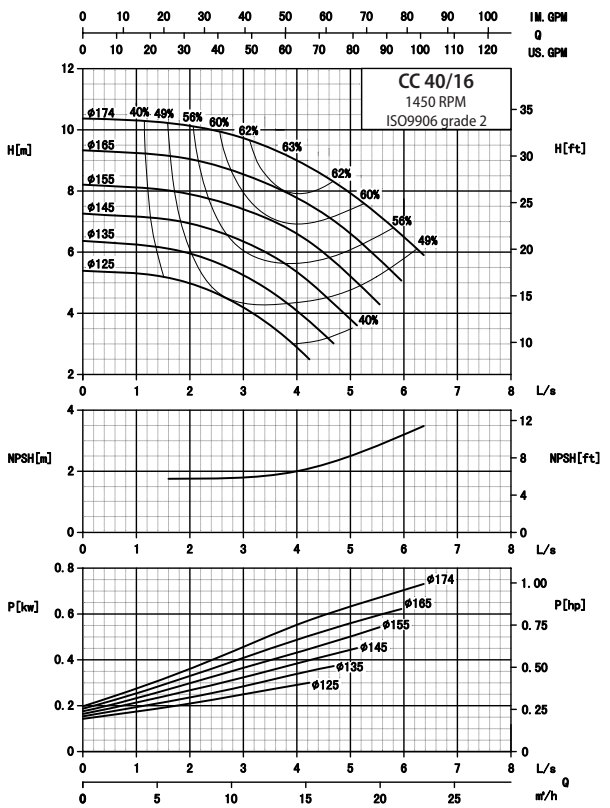

CC 40/16-1450

Installation sketch

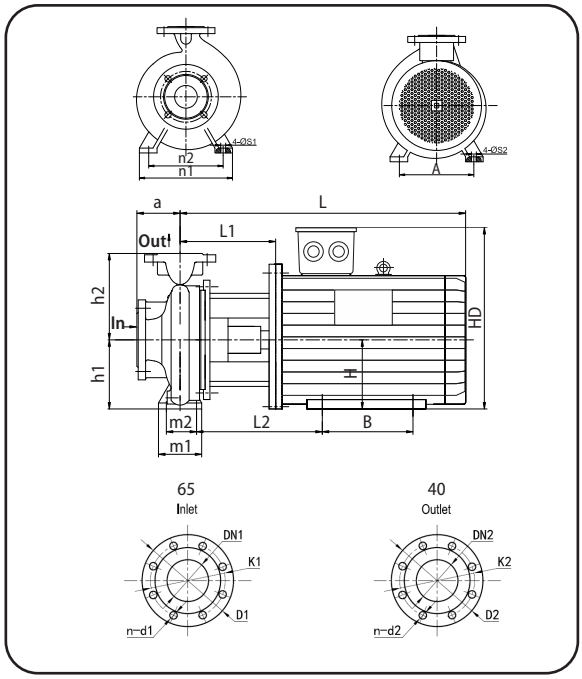

Dimensions -mm

DN1/DN2	32	40	50	65	80	100	125	150	200
D1/D2	140	150	165	185	200	220	250	285	340
K1/K2	100	110	125	145	160	180	210	240	295
n-d1/ n-d2	4-Φ18	4-Φ18	4-Φ18	4-Φ18	8-Φ18	8-Φ18	8-Φ18	8-Φ22	12-Φ22

Model	a	h1	h2	L1	L2	L	A	B	H	HD	m1	m2	n1	n2	S1	S2
CC 40/16-00554	80	132	160	152	167	407	125	100	80	220	100	70	240	190	14	10
CC 40/16-00754	80	132	160	152	167	407	125	100	80	220	100	70	240	190	14	10
CC 40/16-01104	80	132	160	152	173	422	140	100	90	250	100	70	240	190	14	10

Performance table

Model	Impeller Dia. [mm]	Motor size [kW]	Q [L/s]	2	3	4	5	6
CC 40/16-00554	125	0.55	H [m]	5	4.2	--	--	--
CC 40/16-00554	135	0.55		6	5.2	4	--	--
CC 40/16-00554	145	0.55		6.9	6.3	4.3	--	--
CC 40/16-00754	155	0.75		7.9	7.4	6.6	5.2	--
CC 40/16-00754	165	0.75		9	8.5	7.8	6.6	--
CC 40/16-01104	174	1.1		10.2	9.7	9	7.9	6.5

Performance curves

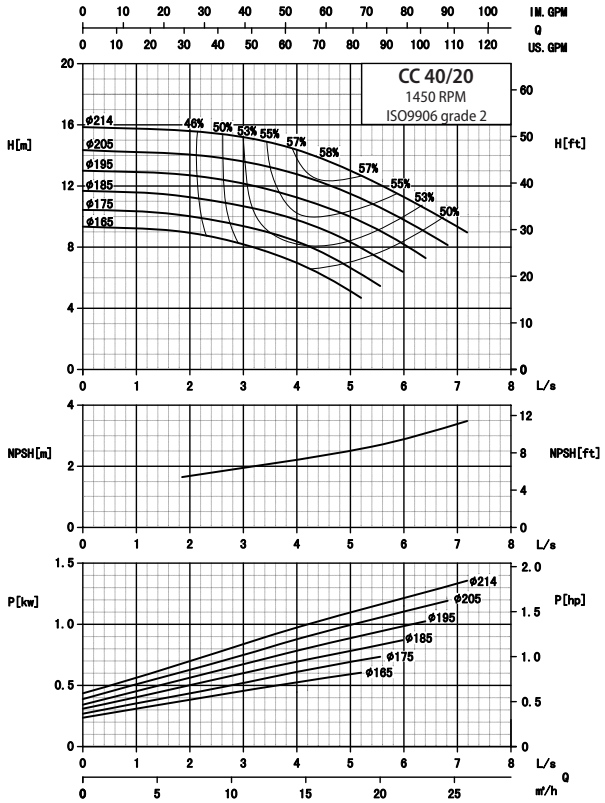

CC 40/20-1450

Installation sketch

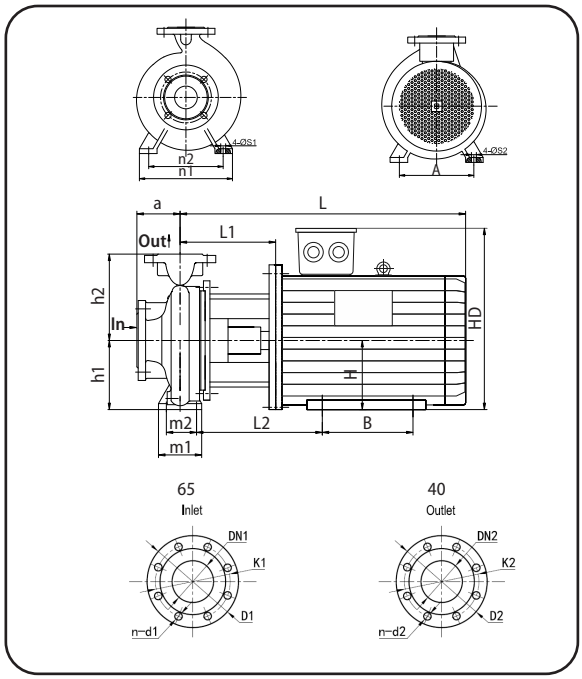

Dimensions -mm

DN1/DN2	32	40	50	65	80	100	125	150	200
D1/D2	140	150	165	185	200	220	250	285	340
K1/K2	100	110	125	145	160	180	210	240	295
n-d1/ n-d2	4-Φ18	4-Φ18	4-Φ18	4-Φ18	8-Φ18	8-Φ18	8-Φ18	8-Φ22	12-Φ22

Model	a	h1	h2	L1	L2	L	A	B	H	HD	m1	m2	n1	n2	S1	S2
CC 40/20-00754	100	160	180	151	166	406	125	100	80	220	100	70	265	212	14	10
CC 40/20-01104	100	160	180	151	172	421	140	100	90	250	100	70	265	212	14	10
CC 40/20-01504	100	160	180	151	172	446	140	125	90	250	100	70	265	212	14	10

Performance table

Model	Impeller Dia. [mm]	Motor size [kW]	Q [L/s]	2	3	4	5	6
CC 40/20-00754	165	0.75	H [m]	9	8.1	7	--	--
CC 40/20-00754	175	0.75		10	9.5	8.4	6.7	--
CC 40/20-01104	185	1.1		11.2	10.7	9.9	8.2	--
CC 40/20-01104	195	1.1		12.7	12.1	11.2	10	8
CC 40/20-01504	205	1.5		14	13.6	12.8	11.6	9.9
CC 40/20-01504	214	1.5		15.6	15.2	14.5	13	11.2

Performance curves

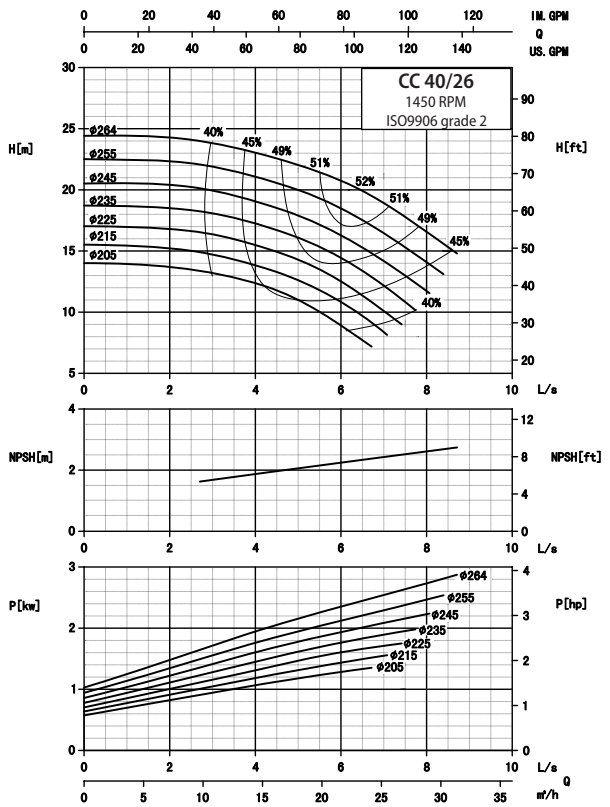

CC 40/26-1450

Installation sketch

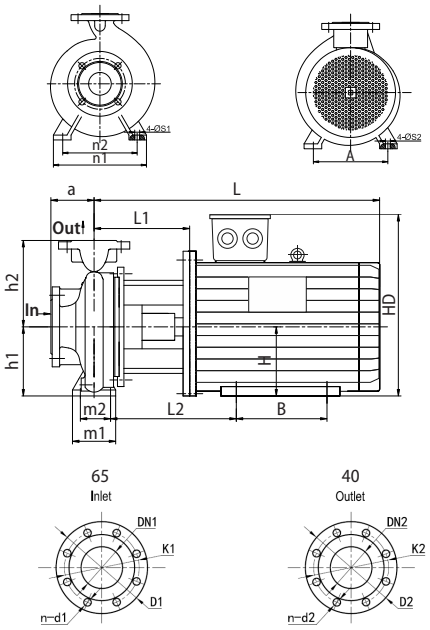

Dimensions -mm

DN1/DN2	32	40	50	65	80	100	125	150	200
D1/D2	140	150	165	185	200	220	250	285	340
K1/K2	100	110	125	145	160	180	210	240	295
n-d1/ n-d2	4-Φ18	4-Φ18	4-Φ18	4-Φ18	8-Φ18	8-Φ18	8-Φ18	8-Φ22	12-Φ22

Model	a	h1	h2	L1	L2	L	A	B	H	HD	m1	m2	n1	n2	S1	S2
CC 40/26-02204	100	180	225	173	187	498	160	140	100	270	125	95	320	250	14	12
CC 40/26-03004	100	180	225	173	187	498	160	140	100	270	125	95	320	250	14	12

Performance table

Model	Impeller Dia. [mm]	Motor size [kW]	Q [L/s]	4	5	6	7	8
CC 40/26-02204	205	2.2	H [m]	12.3	11	9	--	--
CC 40/26-02204	215	2.2		13.9	12.8	10.9	--	--
CC 40/26-02204	225	2.2		15.5	14.2	12.6	--	--
CC 40/26-02204	235	2.2		17.2	16	14.5	12	--
CC 40/26-02204	245	2.2		19	18	16.2	14	--
CC 40/26-03004	255	3		21	20	18.5	16.2	14
CC 40/26-03004	264	3		23	22	20.8	19	16.6

Performance curves

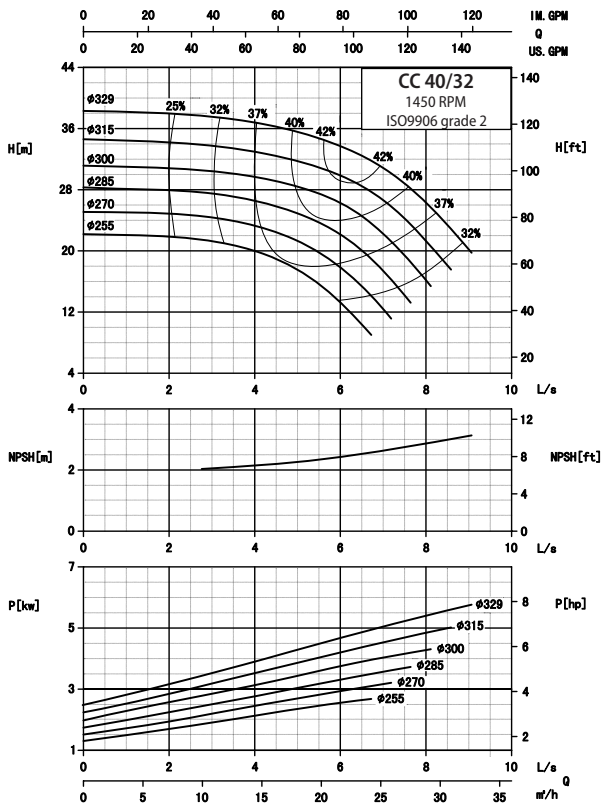

CC 40/32-1450

Installation sketch

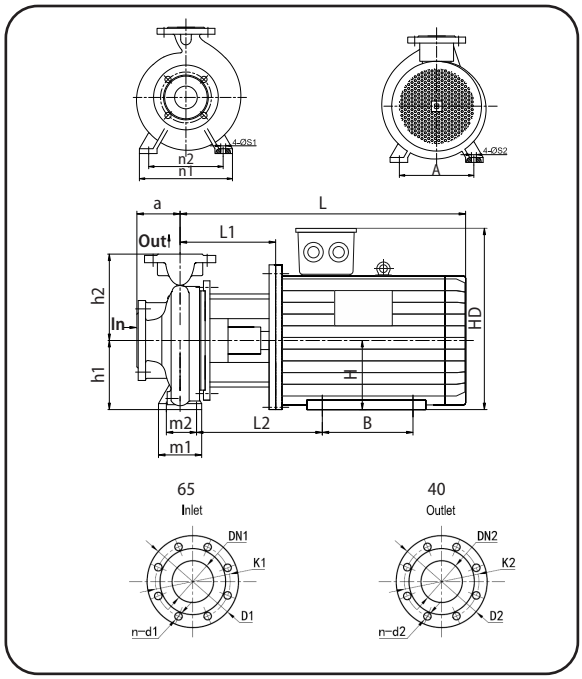

Dimensions -mm

DN1/DN2	32	40	50	65	80	100	125	150	200
D1/D2	140	150	165	185	200	220	250	285	340
K1/K2	100	110	125	145	160	180	210	240	295
n-d1/ n-d2	4-Φ18	4-Φ18	4-Φ18	4-Φ18	8-Φ18	8-Φ18	8-Φ18	8-Φ22	12-Φ22

Model	a	h1	h2	L1	L2	L	A	B	H	HD	m1	m2	n1	n2	S1	S2
CC 40/32-03004	125	200	250	179	195	504	160	140	100	270	125	95	345	280	14	12
CC 40/32-04004	125	200	250	179	202	519	190	140	112	300	125	95	345	280	14	12
CC 40/32-05504	125	200	250	201	243	591	216	140	132	345	125	95	345	280	14	12
CC 40/32-05704	125	200	250	201	243	632	216	178	132	345	125	95	345	280	14	12

Performance table

Model	Impeller Dia. [mm]	Motor size [kW]	Q [L/s]	4	5	6	7	8
CC 40/32-03004	255	3	H [m]	20	17.9	13.5	--	--
CC 40/32-04004	270	4		23.5	21.5	18	--	--
CC 40/32-04004	285	4		26.5	25	22	17.6	--
CC 40/32-05504	300	5.5		30	28.2	26	22.1	--
CC 40/32-05504	315	5.5		33	33.9	30	26.9	21.5
CC 40/32-05504	329	5.5		37	35.5	33.9	31	26

Performance curves

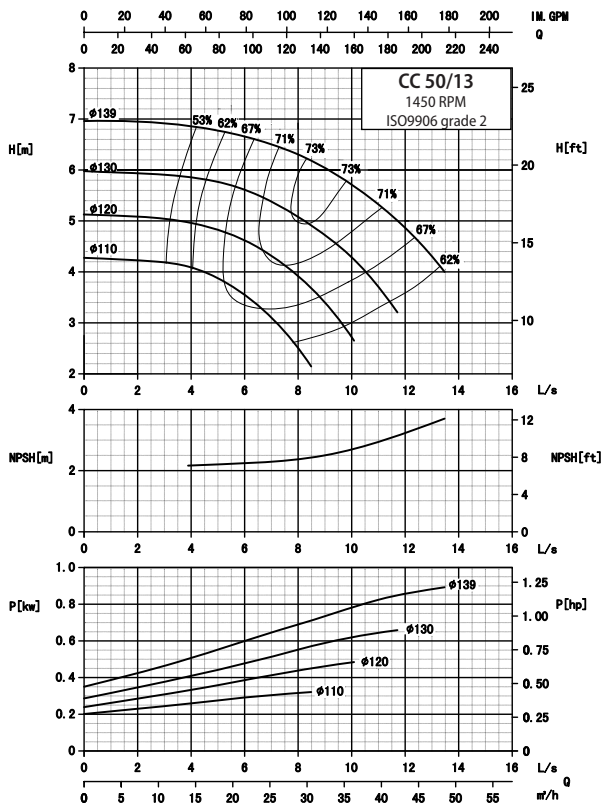

CC 50/13-1450

Installation sketch

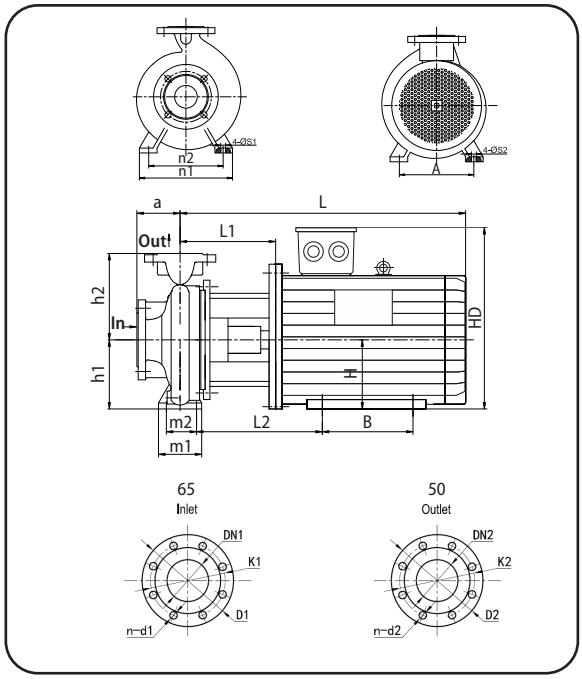

Dimensions -mm

DN1/DN2	32	40	50	65	80	100	125	150	200
D1/D2	140	150	165	185	200	220	250	285	340
K1/K2	100	110	125	145	160	180	210	240	295
n-d1/ n-d2	4-Φ18	4-Φ18	4-Φ18	4-Φ18	8-Φ18	8-Φ18	8-Φ18	8-Φ22	12-Φ22

Model	a	h1	h2	L1	L2	L	A	B	H	HD	m1	m2	n1	n2	S1	S2
CC 50/13-00554	100	132	160	152	167	407	125	100	80	220	100	70	240	190	14	10
CC 50/13-00754	100	132	160	152	167	407	125	100	80	220	100	70	240	190	14	10
CC 50/13-01104	100	132	160	152	173	422	140	100	90	250	100	70	240	190	14	10

Performance table

Model	Impeller Dia. [mm]	Motor size [kW]	Q [L/s]	4	6	8	10	12
CC 50/13-00554	110	0.55	H [m]	4.1	3.6	2.5	--	--
CC 50/13-00554	120	0.55		4.9	4.6	3.9	--	--
CC 50/13-00754	130	0.75		5.8	5.6	5.1	4.3	--
CC 50/13-01104	139	1.1		6.8	6.6	6.3	5.7	4.8

Performance curves

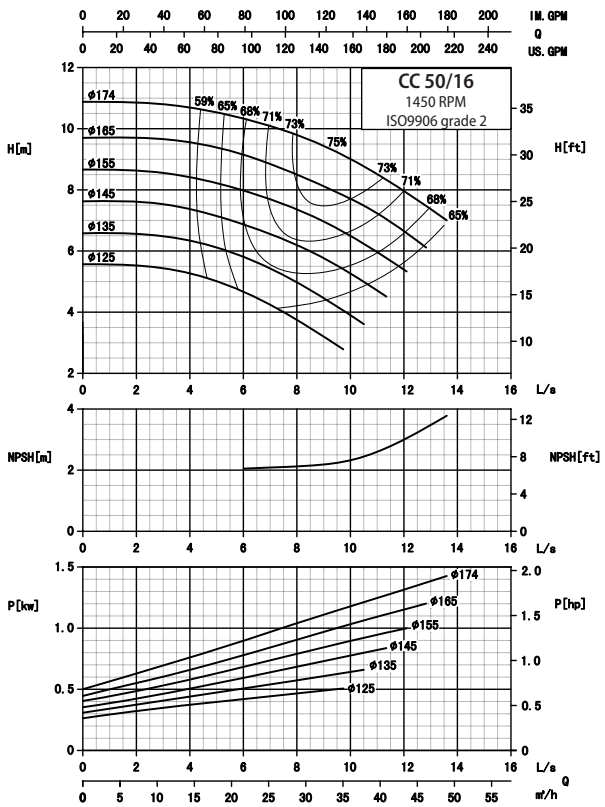

CC 50/16-1450

Installation sketch

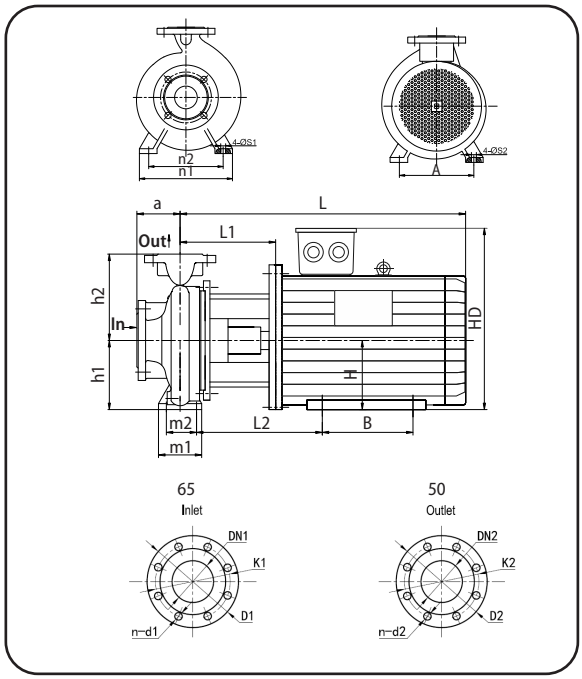

Dimensions -mm

DN1/DN2	32	40	50	65	80	100	125	150	200
D1/D2	140	150	165	185	200	220	250	285	340
K1/K2	100	110	125	145	160	180	210	240	295
n-d1/ n-d2	4-Φ18	4-Φ18	4-Φ18	4-Φ18	8-Φ18	8-Φ18	8-Φ18	8-Φ22	12-Φ22

Model	a	h1	h2	L1	L2	L	A	B	H	HD	m1	m2	n1	n2	S1	S2
CC 50/16-00554	100	160	180	152	167	407	125	100	80	220	100	70	265	212	14	10
CC 50/16-00754	100	160	180	152	167	407	125	100	80	220	100	70	265	212	14	10
CC 50/16-01104	100	160	180	152	173	422	140	100	90	250	100	70	265	212	14	10
CC 50/16-01504	100	160	180	152	173	447	140	125	90	250	100	70	265	212	14	10

Performance table

Model	Impeller Dia. [mm]	Motor size [kW]	Q [L/s]	7	8	9	10	12
CC 50/16-00554	125	0.55	H [m]	4.3	3.8	--	--	--
CC 50/16-00754	135	0.75		5.5	5	4.5	--	--
CC 50/16-01104	145	1.1		6.5	6.2	6.8	5.3	--
CC 50/16-01104	155	1.1		7.7	7.4	7	6.5	--
CC 50/16-01504	165	1.5		8.8	8.5	8.1	7.7	6.6
CC 50/16-01504	174	1.5		10.1	9.8	9.4	9	8

Performance curves

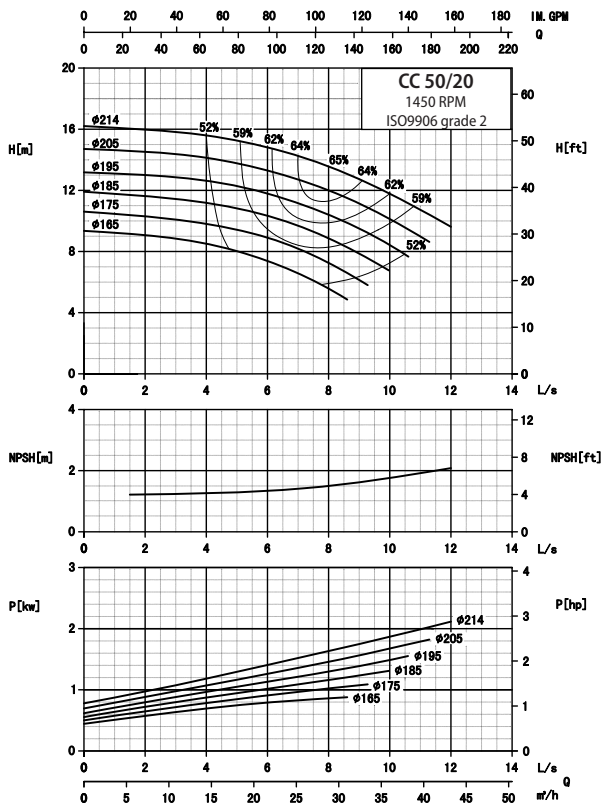

CC 50/20-1450

Installation sketch

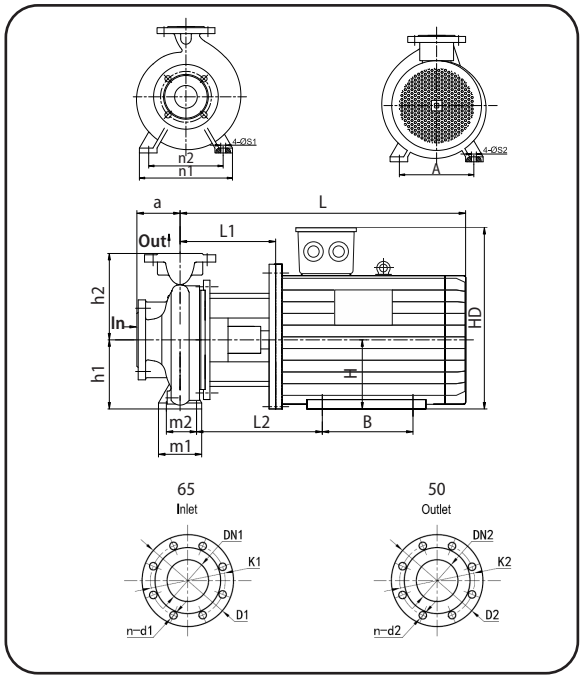

Dimensions -mm

DN1/DN2	32	40	50	65	80	100	125	150	200
D1/D2	140	150	165	185	200	220	250	285	340
K1/K2	100	110	125	145	160	180	210	240	295
n-d1/ n-d2	4-Φ18	4-Φ18	4-Φ18	4-Φ18	8-Φ18	8-Φ18	8-Φ18	8-Φ22	12-Φ22

Model	a	h1	h2	L1	L2	L	A	B	H	HD	m1	m2	n1	n2	S1	S2
CC 50/20-01104	100	160	200	154	172	421	140	100	90	250	100	70	265	212	14	10
CC 50/20-01504	100	160	200	154	172	449	140	125	90	250	100	70	265	212	14	10
CC 50/20-02204	100	160	200	166	191	491	160	140	100	270	100	70	265	212	14	12

Performance table

Model	Impeller Dia. [mm]	Motor size [kW]	Q [L/s]	2	4	6	8	10
CC 50/20-01104	165	1.1	H [m]	9	8.5	7.5	5.7	--
CC 50/20-01504	175	1.5		10.3	9.9	9	7.2	--
CC 50/20-01504	185	1.5		11.6	11.1	10.5	9	--
CC 50/20-02204	195	2.2		13	12.8	11.8	10.5	8.5
CC 50/20-02204	205	2.2		14.5	14.1	13.3	12	10
CC 50/20-02204	214	2.2		16	15.7	14.9	13.5	11.8

Performance curves

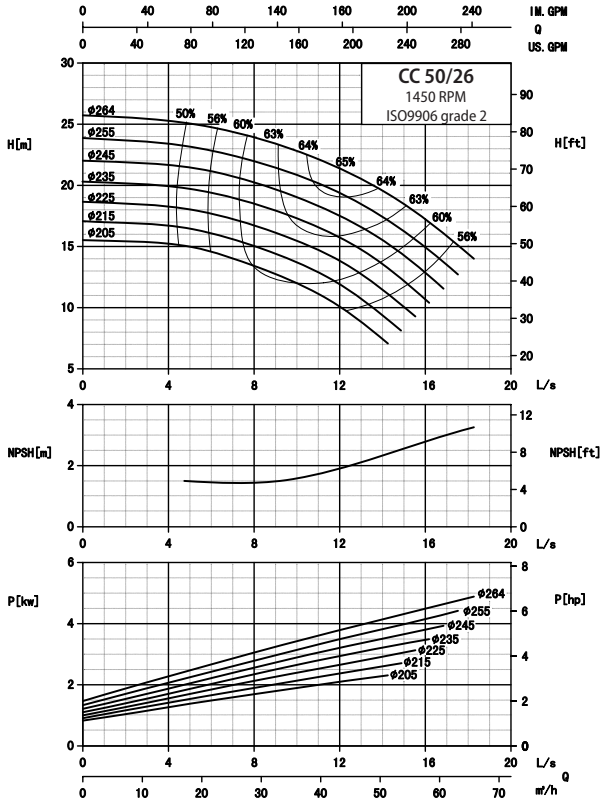

CC 50/26-1450

Installation sketch

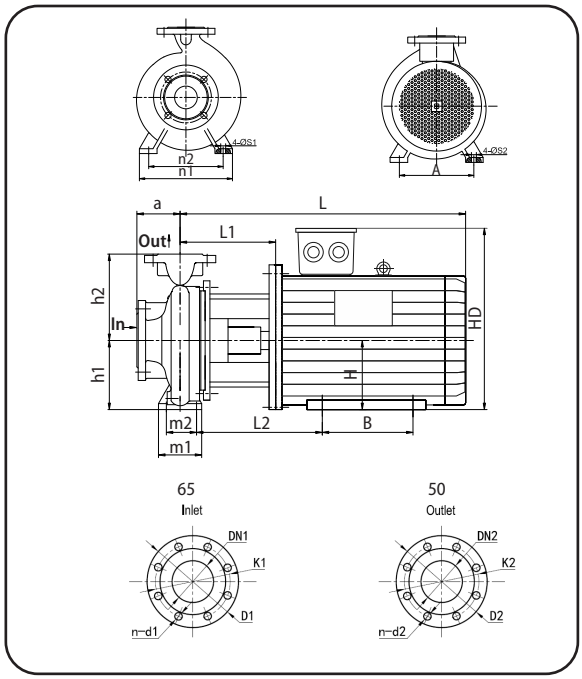

Dimensions -mm

DN1/DN2	32	40	50	65	80	100	125	150	200
D1/D2	140	150	165	185	200	220	250	285	340
K1/K2	100	110	125	145	160	180	210	240	295
n-d1/ n-d2	4-Φ18	4-Φ18	4-Φ18	4-Φ18	8-Φ18	8-Φ18	8-Φ18	8-Φ22	12-Φ22

Model	a	h1	h2	L1	L2	L	A	B	H	HD	m1	m2	n1	n2	S1	S2
CC 50/26-02204	100	180	225	174	187	497	160	140	100	270	125	95	320	250	14	12
CC 50/26-03004	100	180	225	174	187	497	160	140	100	270	125	95	320	250	14	12
CC 50/26-04004	100	180	225	174	194	512	190	178	112	300	125	95	320	250	14	12
CC 50/26-05504	100	180	225	197	236	587	216	140	132	345	125	95	320	250	14	12

Performance table

Model	Impeller Dia. [mm]	Motor size [kW]	Q [L/s]	6	8	12	14	16
CC 50/26-02204	205	2.2	H [m]	14.5	13.5	10	--	--
CC 50/26-03004	215	3		16	15	12	9.5	--
CC 50/26-03004	225	3		17.8	16.8	13.9	11.5	--
CC 50/26-04004	235	4		19.5	18.5	15.8	13.6	--
CC 50/26-04004	245	4		21.2	20.2	17.5	15.5	13
CC 50/26-05504	255	5.5		22.9	22	19.3	17.4	15
CC 50/26-05504	264	5.5		24.7	24	21.5	19.7	17.1

Performance curves

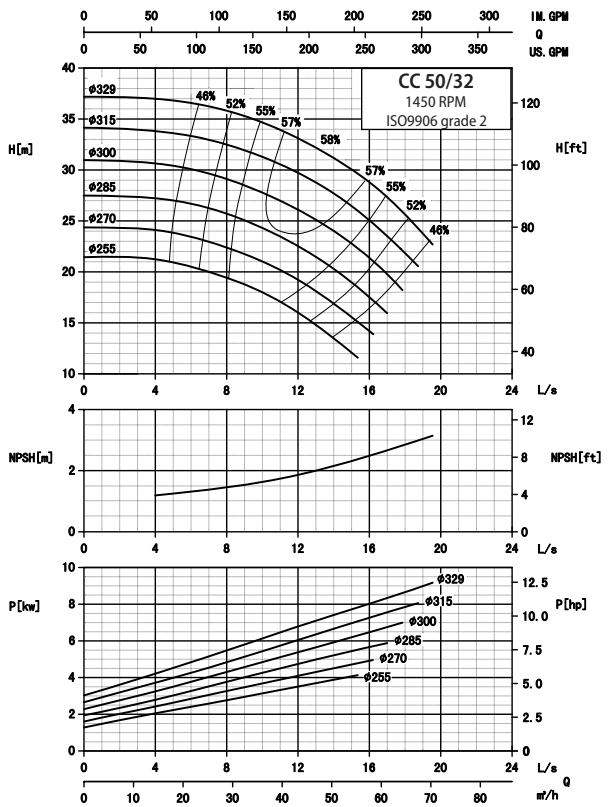

CC 50/32-1450

Installation sketch

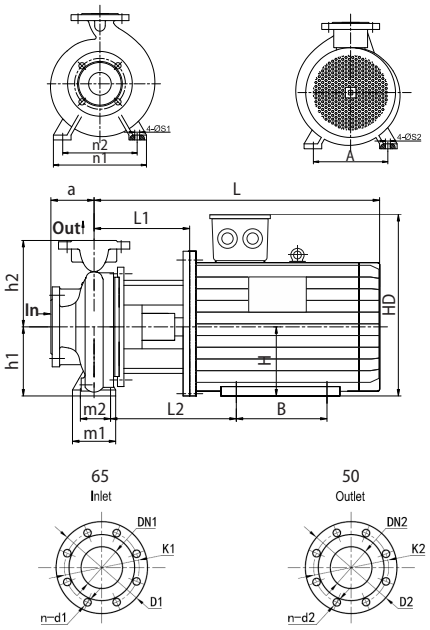

Dimensions -mm

DN1/DN2	32	40	50	65	80	100	125	150	200
D1/D2	140	150	165	185	200	220	250	285	340
K1/K2	100	110	125	145	160	180	210	240	295
n-d1/ n-d2	4-Φ18	4-Φ18	4-Φ18	4-Φ18	8-Φ18	8-Φ18	8-Φ18	8-Φ22	12-Φ22

Model	a	h1	h2	L1	L2	L	A	B	H	HD	m1	m2	n1	n2	S1	S2
CC 50/32-04004	125	225	280	180	202	520	190	140	112	300	125	95	345	280	18	12
CC 50/32-05504	125	225	280	201	243	591	216	140	132	345	125	95	345	280	18	12
CC 50/32-07504	125	225	280	201	243	631	216	178	132	345	125	95	345	280	18	12
CC 50/32-11004	125	225	280	231	292	736	254	210	160	420	125	95	345	280	18	15

Performance table

Model	Impeller Dia. [mm]	Motor size [kW]	Q [L/s]	6	8	12	16	18
CC 50/32-04004	255	4	H [m]	20.5	19.5	16	--	--
CC 50/32-05504	270	5.5		23.5	22.5	19	--	--
CC 50/32-07504	285	7.5		26.8	25.8	22.7	17.5	--
CC 50/32-07504	300	7.5		30	29	26	21.5	--
CC 50/32-11004	315	11		33.4	32.5	29.8	25	--
CC 50/32-11004	329	11		36.5	35.9	33	29	25.8

Performance curves

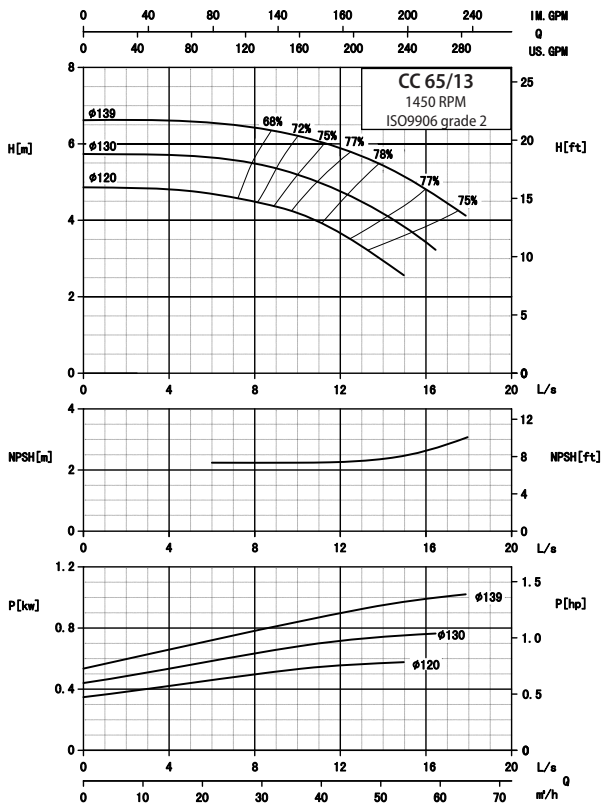

CC 65/13-1450

Installation sketch

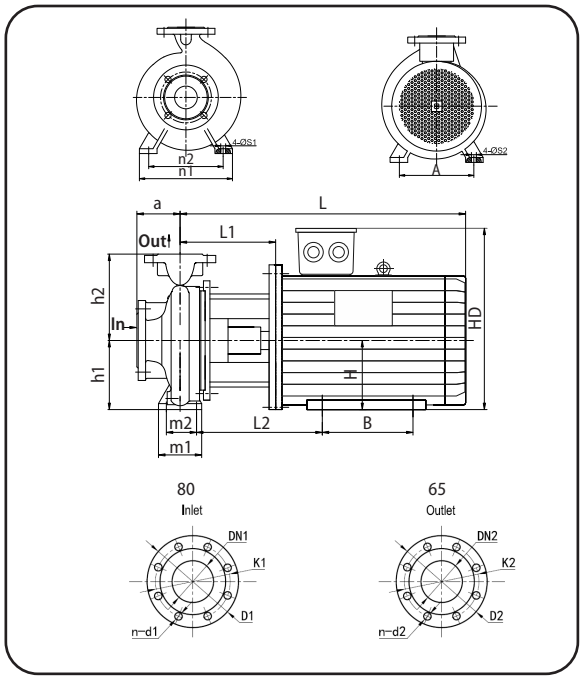

Dimensions -mm

DN1/DN2	32	40	50	65	80	100	125	150	200
D1/D2	140	150	165	185	200	220	250	285	340
K1/K2	100	110	125	145	160	180	210	240	295
n-d1/ n-d2	4-Φ18	4-Φ18	4-Φ18	4-Φ18	8-Φ18	8-Φ18	8-Φ18	8-Φ22	12-Φ22

Model	a	h1	h2	L1	L2	L	A	B	H	HD	m1	m2	n1	n2	S1	S2
CC 65/13-00754	100	160	180	152	154	407	125	100	80	220	125	95	280	212	14	10
CC 65/13-01104	100	160	180	152	161	422	140	100	90	250	125	95	280	212	14	10
CC 65/13-01504	100	160	180	152	161	447	140	125	90	250	125	95	280	212	14	10

Performance table

Model	Impeller Dia. [mm]	Motor size [kW]	Q [L/s]	8	10	12	14	16
CC 65/13-00754	120	0.75	H [m]	4.5	4.2	3.7	2.9	--
CC 65/13-01104	130	1.1		5.5	5.2	4.8	4.2	--
CC 65/13-01504	139	1.5		6.4	6.2	5.9	5.4	4.7

Performance curves

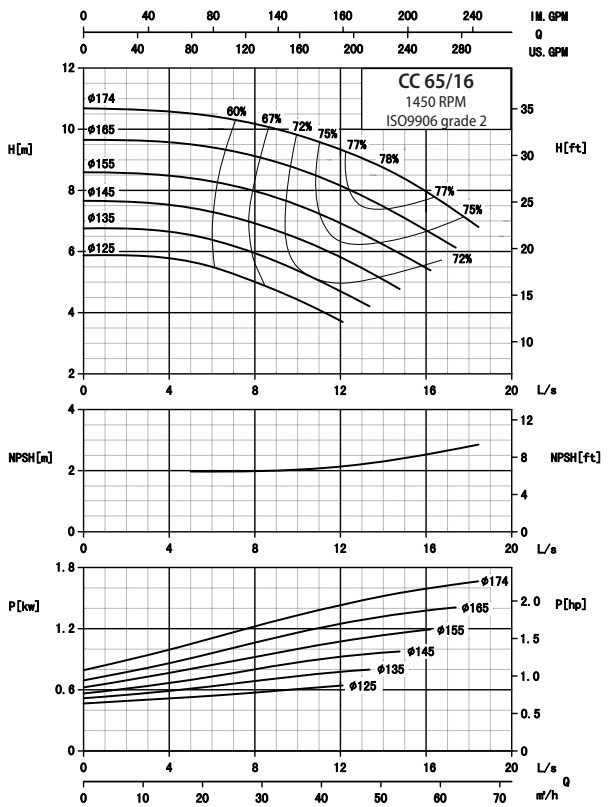

CC 65/16-1450

Installation sketch

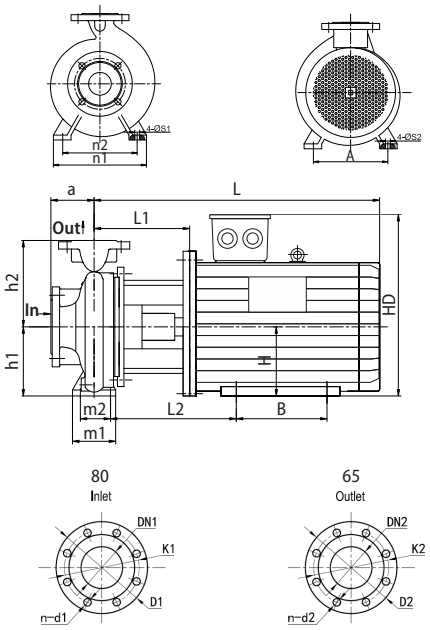

Dimensions -mm

DN1/DN2	32	40	50	65	80	100	125	150	200
D1/D2	140	150	165	185	200	220	250	285	340
K1/K2	100	110	125	145	160	180	210	240	295
n-d1/ n-d2	4-Φ18	4-Φ18	4-Φ18	4-Φ18	8-Φ18	8-Φ18	8-Φ18	8-Φ22	12-Φ22

Model	a	h1	h2	L1	L2	L	A	B	H	HD	m1	m2	n1	n2	S1	S2
CC 65/16-00754	100	160	200	152	155	407	125	100	80	220	125	95	280	212	14	10
CC 65/16-01104	100	160	200	152	160	422	140	100	90	250	125	95	280	212	14	10
CC 65/16-01504	100	160	200	152	160	447	140	125	90	250	125	95	280	212	14	10
CC 65/16-02204	100	160	200	164	180	489	160	140	100	270	125	95	280	212	14	12

Performance table

Model	Impeller Dia. [mm]	Motor size [kW]	Q [L/s]	8	10	12	14	16
CC 65/16-01104	125	1.1	H [m]	5	4.4	--	--	--
CC 65/16-01104	135	1.1		6	5.4	4.7	--	--
CC 65/16-01504	145	1.5		6.9	6.5	5.8	--	--
CC 65/16-01504	155	1.5		8	7.5	7	6.3	--
CC 65/16-02204	165	2.2		9.2	8.7	8.2	7.5	6.7
CC 65/16-02204	174	2.2		10.3	9.7	9.3	8.8	7.9

Performance curves

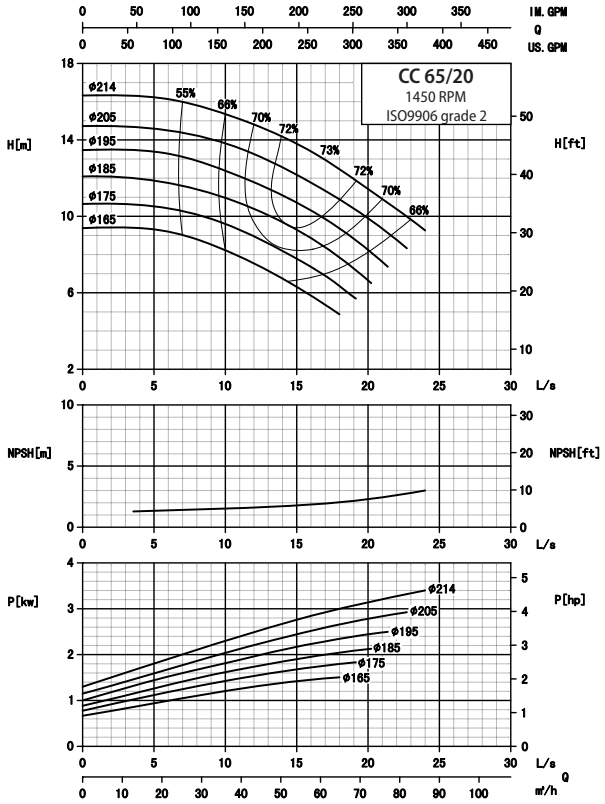

CC 65/20-1450

Installation sketch

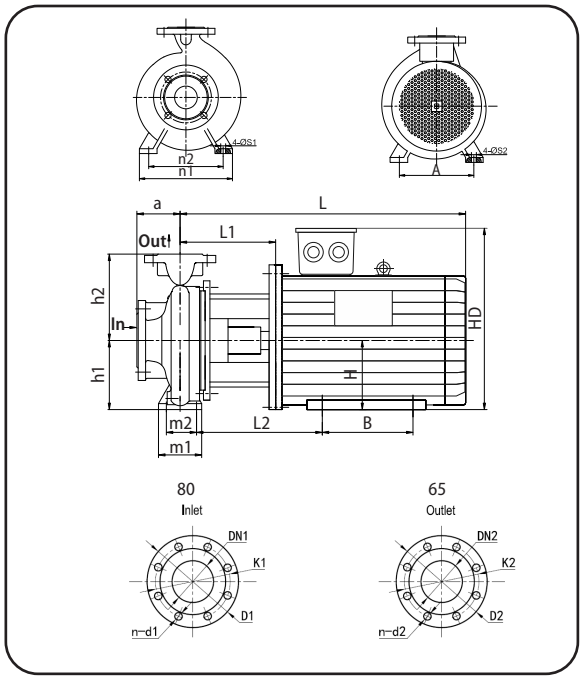

Dimensions -mm

DN1/DN2	32	40	50	65	80	100	125	150	200
D1/D2	140	150	165	185	200	220	250	285	340
K1/K2	100	110	125	145	160	180	210	240	295
n-d1/ n-d2	4-Φ18	4-Φ18	4-Φ18	4-Φ18	8-Φ18	8-Φ18	8-Φ18	8-Φ22	12-Φ22

Model	a	h1	h2	L1	L2	L	A	B	H	HD	m1	m2	n1	n2	S1	S2
CC 65/20-02204	100	180	225	163	179	488	160	140	100	270	125	95	320	250	14	12
CC 65/20-03004	100	180	225	163	179	488	160	140	100	270	125	95	320	250	14	12
CC 65/20-04004	100	180	225	163	186	503	190	140	112	300	125	95	320	250	14	12

Performance table

Model	Impeller Dia. [mm]	Motor size [kW]	Q [L/s]	5	10	15	20	22
CC 65/20-02204	165	2.2	H [m]	9.3	8.2	6.3	--	--
CC 65/20-02204	175	2.2		10.5	9.7	7.8	--	--
CC 65/20-02204	185	2.2		11.9	11	9.4	--	--
CC 65/20-03004	195	3		13.5	12.4	10.7	8.2	--
CC 65/20-03004	205	3		14.7	13.8	12.1	10	--
CC 65/20-04004	214	4		16.2	15.5	13.8	11.5	10.3

Performance curves

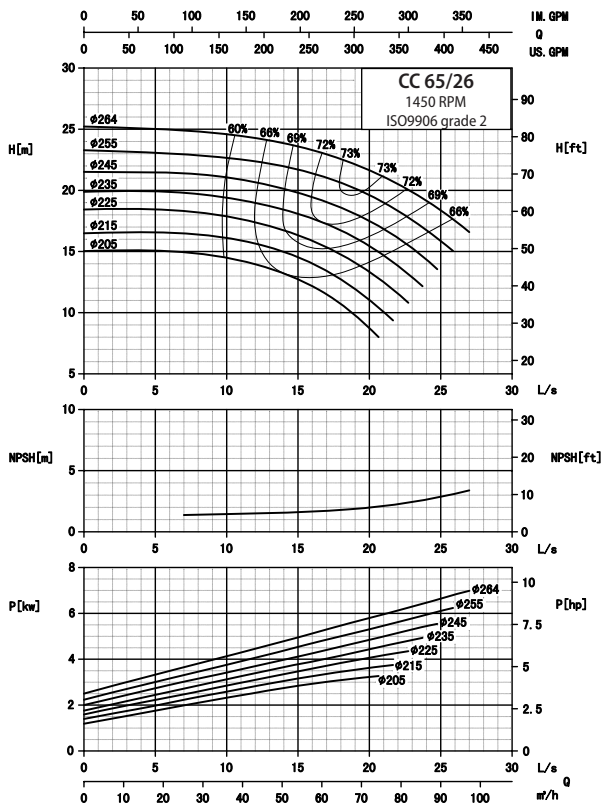

CC 65/26-1450

Installation sketch

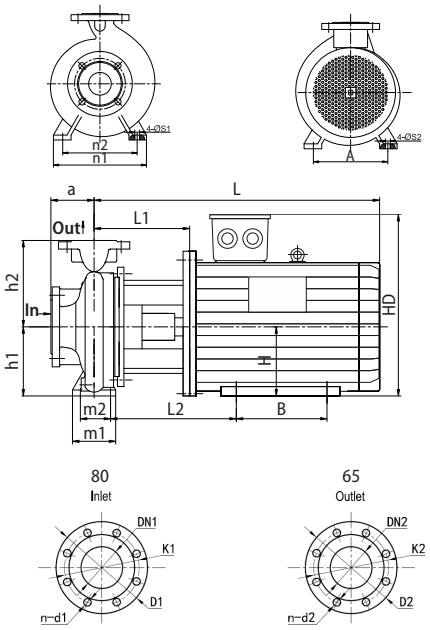

Dimensions -mm

DN1/DN2	32	40	50	65	80	100	125	150	200
D1/D2	140	150	165	185	200	220	250	285	340
K1/K2	100	110	125	145	160	180	210	240	295
n-d1/ n-d2	4-Φ18	4-Φ18	4-Φ18	4-Φ18	8-Φ18	8-Φ18	8-Φ18	8-Φ22	12-Φ22

Model	a	h1	h2	L1	L2	L	A	B	H	HD	m1	m2	n1	n2	S1	S2
CC 65/26-04004	100	200	250	179	189	519	190	140	112	300	160	120	360	280	18	12
CC 65/26-05504	100	200	250	202	231	592	216	140	132	345	160	120	360	280	18	12
CC 65/26-07504	100	200	250	202	231	632	216	178	132	345	160	120	360	280	18	12

Performance table

Model	Impeller Dia. [mm]	Motor size [kW]	Q [L/s]	8	10	15	20	25
CC 65/26-04004	205	4	H [m]	14.9	14.5	12.9	--	--
CC 65/26-04004	215	4		16.4	16	14.6	11	--
CC 65/26-05504	225	5.5		18.1	18	16.3	13.1	--
CC 65/26-05504	235	5.5		19.8	19.4	18	15.5	--
CC 65/26-05504	245	5.5		21.2	21	19.9	17.5	--
CC 65/26-07504	255	7.5		22.9	22.8	21.8	19.8	--
CC 65/26-07504	264	7.5		24.8	24.6	23.5	21.7	18.4

Performance curves

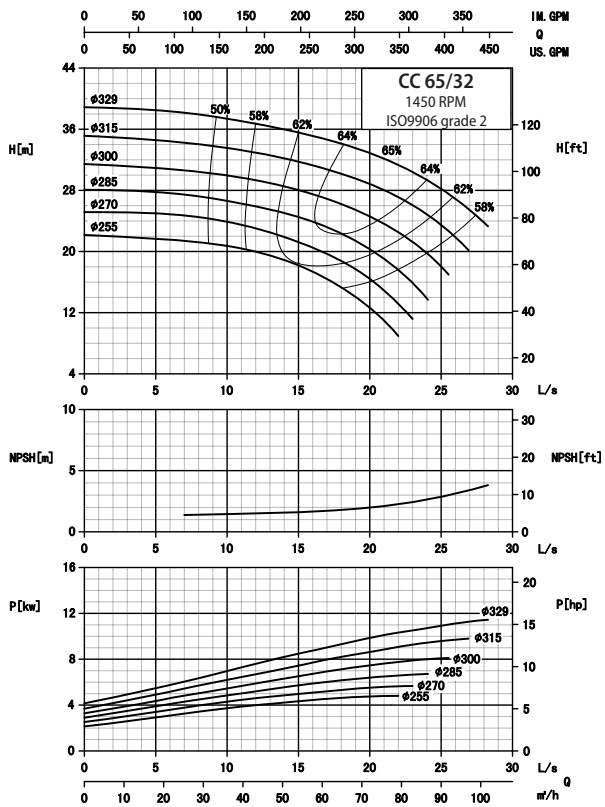

CC 65/32-1450

Installation sketch

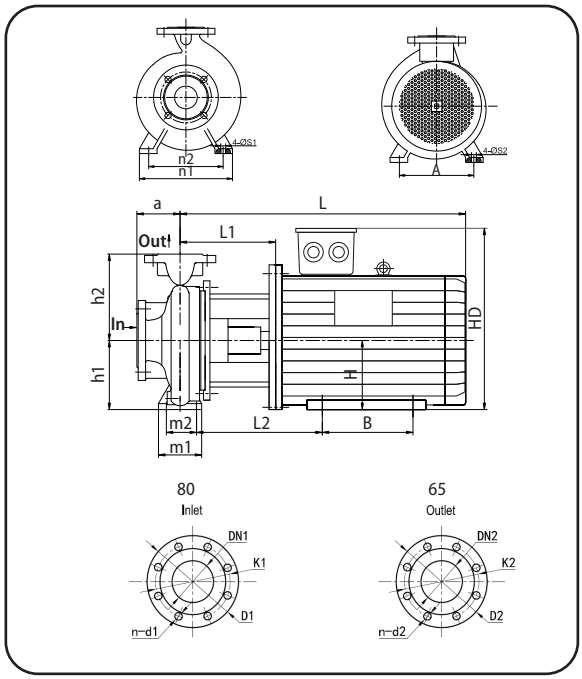

Dimensions -mm

DN1/DN2	32	40	50	65	80	100	125	150	200
D1/D2	140	150	165	185	200	220	250	285	340
K1/K2	100	110	125	145	160	180	210	240	295
n-d1/ n-d2	4-Φ18	4-Φ18	4-Φ18	4-Φ18	8-Φ18	8-Φ18	8-Φ18	8-Φ22	12-Φ22

Model	a	h1	h2	L1	L2	L	A	B	H	HD	m1	m2	n1	n2	S1	S2
CC 65/32-05504	125	225	280	201	230	591	216	140	132	345	160	120	400	315	18	12
CC 65/32-07504	125	225	280	201	230	631	216	178	132	345	160	120	400	315	18	12
CC 65/32-11004	125	225	280	235	283	740	254	210	160	420	160	120	400	315	18	15
CC 65/32-15004	125	225	280	235	283	795	254	254	160	420	160	120	400	315	18	15

Performance table

Model	Impeller Dia. [mm]	Motor size [kW]	Q [L/s]	8	10	15	20	25
CC 65/32-05504	255	5.5	H [m]	21.5	20.5	18	12.5	--
CC 65/32-07504	270	7.5		24.5	24	21	16.5	--
CC 65/32-07504	285	7.5		27.5	26.5	24.5	20.5	--
CC 65/32-11004	300	11		30.5	30	28	24.5	--
CC 65/32-11004	315	11		34	33.5	32	29	23.5
CC 65/32-15004	329	15		38	37.5	35.5	33	28

Performance curves

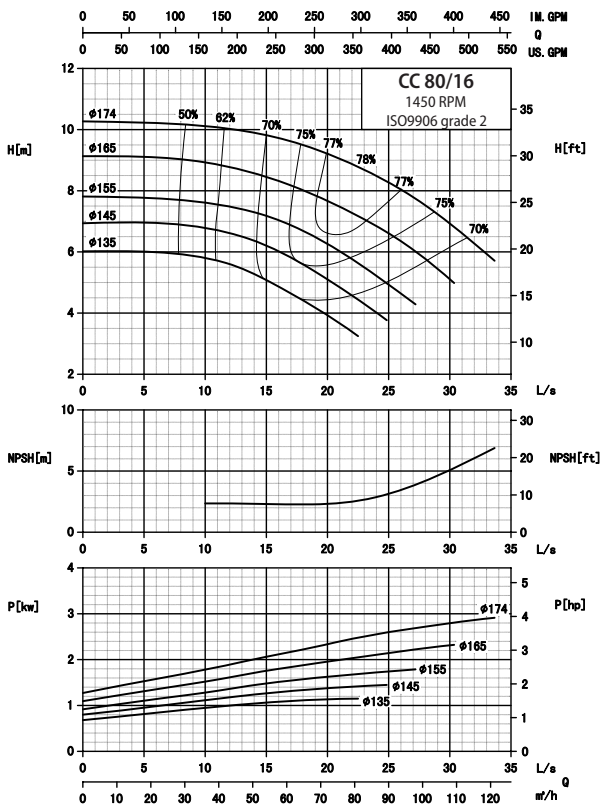

CC 80/16-1450

Installation sketch

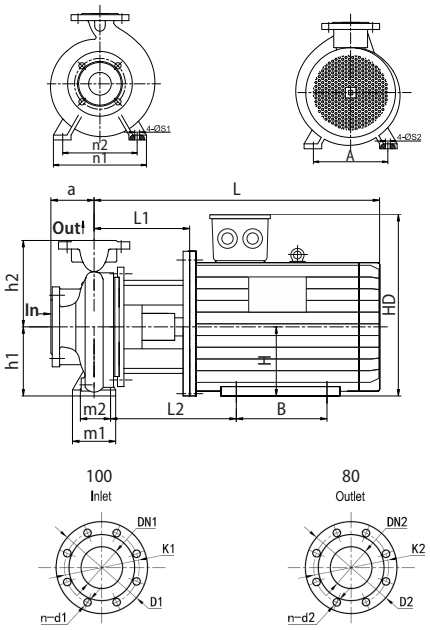

Dimensions -mm

DN1/DN2	32	40	50	65	80	100	125	150	200
D1/D2	140	150	165	185	200	220	250	285	340
K1/K2	100	110	125	145	160	180	210	240	295
n-d1/ n-d2	4-Φ18	4-Φ18	4-Φ18	4-Φ18	8-Φ18	8-Φ18	8-Φ18	8-Φ22	12-Φ22

Model	a	h1	h2	L1	L2	L	A	B	H	HD	m1	m2	n1	n2	S1	S2
CC 80/16-01504	125	180	225	152	160	447	140	125	90	250	125	95	320	250	14	12
CC 80/16-02204	125	180	225	164	180	489	160	140	100	270	125	95	320	250	14	12
CC 80/16-03004	125	180	225	164	180	489	160	140	100	270	125	95	320	250	14	12

Performance table

Model	Impeller Dia. [mm]	Motor size [kW]	Q [L/s]	10	15	20	25	30
CC 80/16-01504	135	1.5	H [m]	5.8	5	3.9	--	--
CC 80/16-02204	145	2.2		6.8	6.2	5.1	--	--
CC 80/16-02204	155	2.2		7.7	7.3	6.3	5	--
CC 80/16-03004	165	3		8.9	8.5	7.7	6.6	--
CC 80/16-03004	174	3		10.2	9.8	9.2	8.3	7

Performance curves

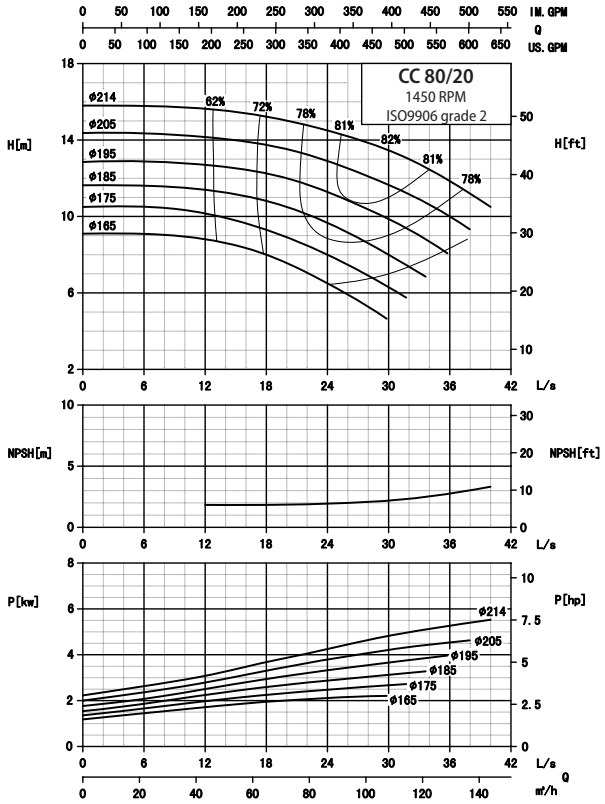

CC 80/20-1450

Installation sketch

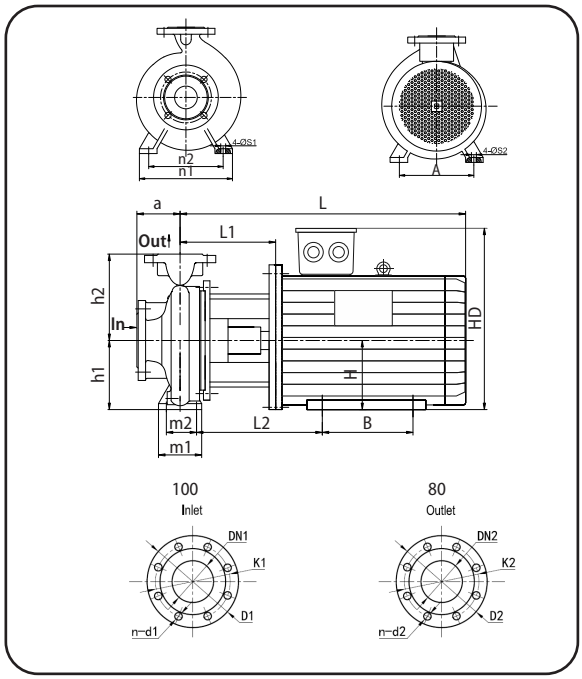

Dimensions -mm

DN1/DN2	32	40	50	65	80	100	125	150	200
D1/D2	140	150	165	185	200	220	250	285	340
K1/K2	100	110	125	145	160	180	210	240	295
n-d1/ n-d2	4-Φ18	4-Φ18	4-Φ18	4-Φ18	8-Φ18	8-Φ18	8-Φ18	8-Φ22	12-Φ22

Model	a	h1	h2	L1	L2	L	A	B	H	HD	m1	m2	n1	n2	S1	S2
CC 80/20-03004	125	180	250	179	195	504	160	140	100	270	125	95	345	280	14	12
CC 80/20-04004	125	180	250	179	202	519	190	140	112	300	125	95	345	280	14	12
CC 80/20-05504	125	180	250	202	244	592	216	140	132	345	125	95	345	280	14	12
CC 80/20-07504	125	180	250	202	244	632	216	178	132	345	125	95	345	280	14	12

Performance table

Model	Impeller Dia. [mm]	Motor size [kW]	Q [L/s]	12	18	24	30	36
CC 80/20-03004	165	3	H [m]	8.9	8	6.5	--	--
CC 80/20-03004	175	3		10.2	9.4	8	--	--
CC 80/20-04004	185	4		11.5	10.8	9.7	8	--
CC 80/20-04004	195	4		12.8	12.2	11.3	9.9	--
CC 80/20-05504	205	5.5		14.1	13.7	12.9	11.7	10
CC 80/20-07504	214	7.5		15.8	15.3	14.5	13.5	11.9

Performance curves

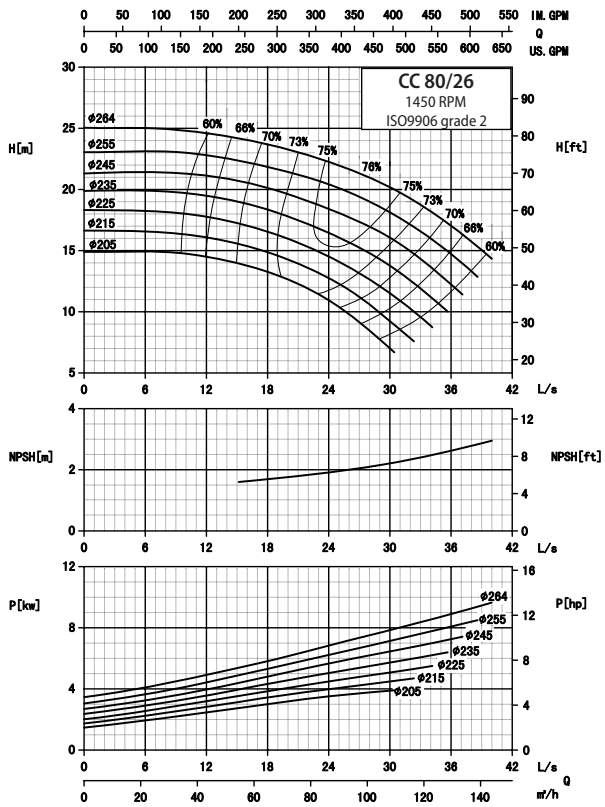

CC 80/26-1450

Installation sketch

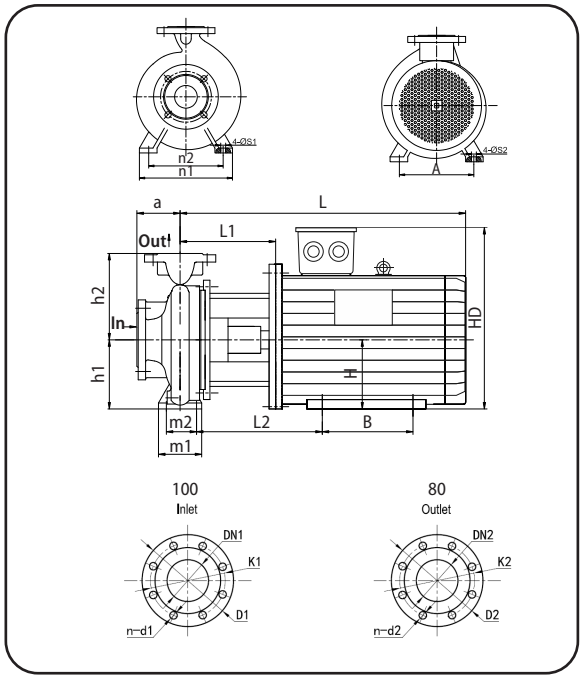

Dimensions -mm

DN1/DN2	32	40	50	65	80	100	125	150	200
D1/D2	140	150	165	185	200	220	250	285	340
K1/K2	100	110	125	145	160	180	210	240	295
n-d1/ n-d2	4-Φ18	4-Φ18	4-Φ18	4-Φ18	8-Φ18	8-Φ18	8-Φ18	8-Φ22	12-Φ22

Model	a	h1	h2	L1	L2	L	A	B	H	HD	m1	m2	n1	n2	S1	S2
CC 80/26-05504	125	200	280	202	231	592	216	140	132	345	160	120	400	315	18	12
CC 80/26-07504	125	200	280	202	231	632	216	178	132	345	160	120	400	315	18	12
CC 80/26-11004	125	200	280	234	282	739	254	210	160	420	160	120	400	315	18	15

Performance table

Model	Impeller Dia. [mm]	Motor size [kW]	Q [L/s]	18	20	24	30	36
CC 80/26-05504	205	5.5	H [m]	13.2	12.3	11	--	--
CC 80/26-05504	215	5.5		14.9	14	12.9	9.1	--
CC 80/26-07504	225	7.5		16.5	15.5	14.5	11.7	--
CC 80/26-07504	235	7.5		18.5	17.5	16.5	13.9	--
CC 80/26-07504	245	7.5		20	19.4	18.5	16	--
CC 80/26-11004	255	11		22	21.2	20.5	18	14.9
CC 80/26-11004	264	11		23.6	23	22.3	20.1	17

Performance curves

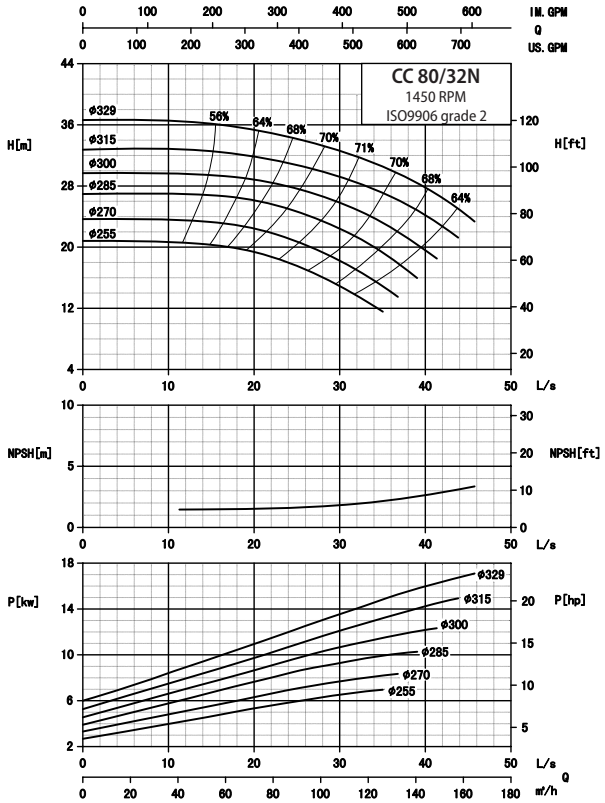

CC 80/32N-1450

Installation sketch

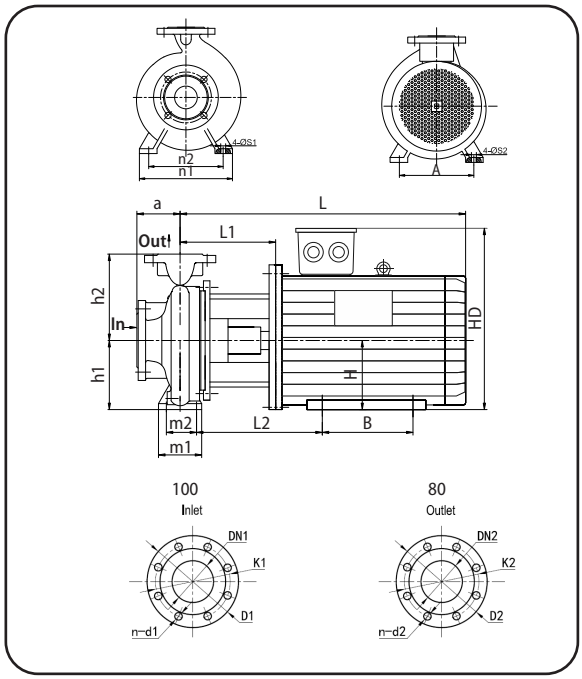

Dimensions -mm

DN1/DN2	32	40	50	65	80	100	125	150	200
D1/D2	140	150	165	185	200	220	250	285	340
K1/K2	100	110	125	145	160	180	210	240	295
n-d1/ n-d2	4-Φ18	4-Φ18	4-Φ18	4-Φ18	8-Φ18	8-Φ18	8-Φ18	8-Φ22	12-Φ22

Model	a	h1	h2	L1	L2	L	A	B	H	HD	m1	m2	n1	n2	S1	S2
CC 80/32-07504	125	250	315	201	230	631	216	178	132	345	160	120	400	315	18	15
CC 80/32-11004	125	250	315	235	283	740	254	210	160	420	160	120	400	315	18	15
CC 80/32-15004	125	250	315	235	283	795	254	254	160	420	160	120	400	315	18	15
CC 80/32-18504	125	250	315	235	296	825	279	241	180	455	160	120	400	315	18	15

Performance table

Model	Impeller Dia. [mm]	Motor size [kW]	Q [L/s]	15	20	30	35	40
CC 80/32N-07504	255	7.5	H [m]	20.5	19.5	15	--	--
CC 80/32N-11004	270	11		23.5	22.5	18	--	--
CC 80/32N-11004	285	11		27	26	22.5	19.5	--
CC 80/32N-15004	300	15		29.5	29	26	23	--
CC 80/32N-15004	315	15		32.5	32	29	27	24
CC 80/32N-18504	329	18.5		36.5	35.5	32.5	30.5	28

Performance curves

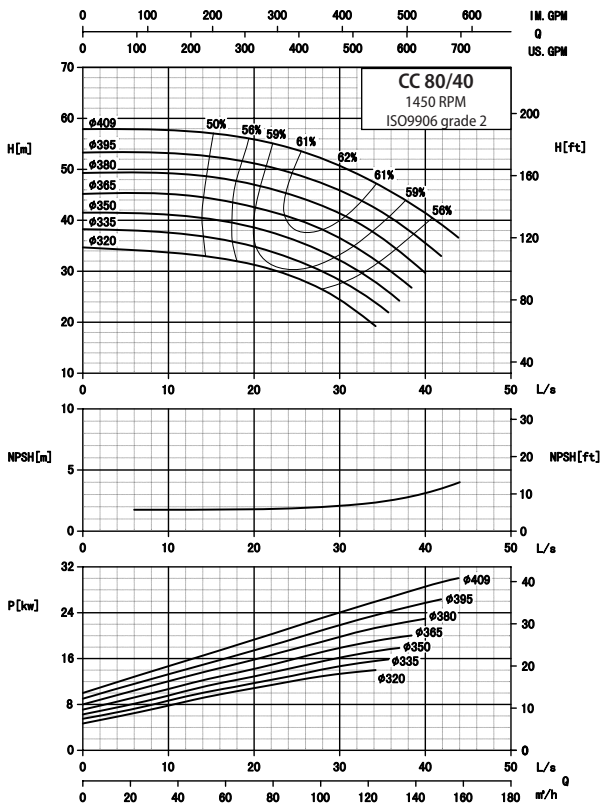

CC 80/40-1450

Installation sketch

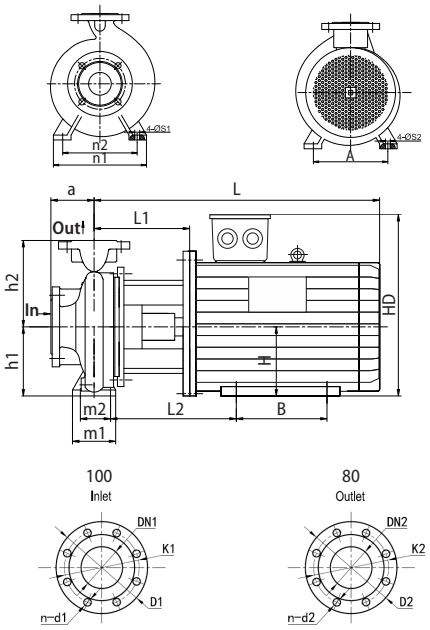

Dimensions -mm

DN1/DN2	32	40	50	65	80	100	125	150	200
D1/D2	140	150	165	185	200	220	250	285	340
K1/K2	100	110	125	145	160	180	210	240	295
n-d1/ n-d2	4-Φ18	4-Φ18	4-Φ18	4-Φ18	8-Φ18	8-Φ18	8-Φ18	8-Φ22	12-Φ22

Model	a	h1	h2	L1	L2	L	A	B	H	HD	m1	m2	n1	n2	S1	S2
CC 80/40-15004	125	280	355	249	297	809	254	254	160	420	160	120	400	315	18	15
CC 80/40-18504	125	280	355	249	310	839	279	241	180	455	160	120	400	315	18	15
CC 80/40-22004	125	280	355	249	310	879	279	279	180	455	160	120	400	315	18	15
CC 80/40-30004	125	280	355	249	322	909	318	305	200	505	160	120	400	315	18	19

Performance table

Model	Impeller Dia. [mm]	Motor size [kW]	Q [L/s]	10	20	30	35	40
CC 80/40-15004	320	15	H [m]	34	31	24	--	--
CC 80/40-18504	335	18.5		38	35	28	--	--
CC 80/40-18504	350	18.5		41	38.5	32	27	--
CC 80/40-22004	365	22		45	42.5	36	31	--
CC 80/40-30004	380	30		49	47	41.5	36	--
CC 80/40-30004	395	30		53	51	46	41.5	--
CC 80/40-30004	409	30		58	56	51	46.5	42

Performance curves

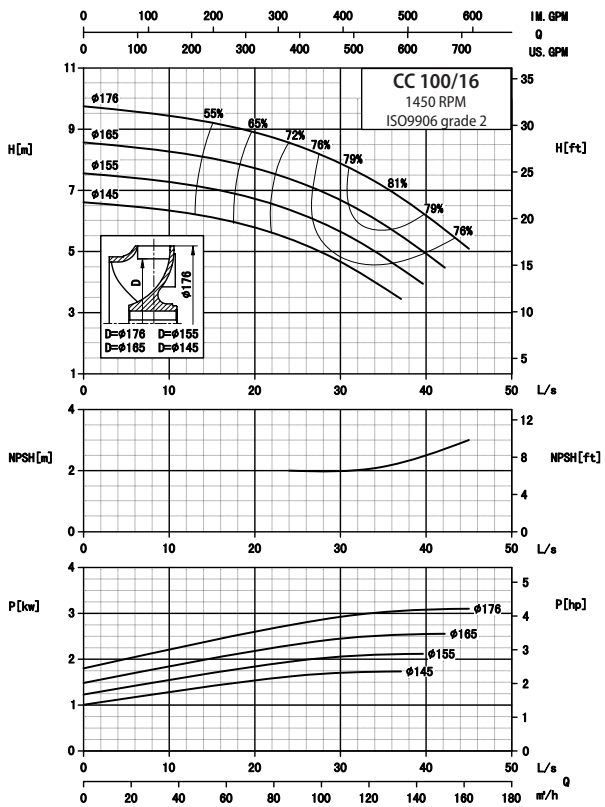

CC 100/16-1450

Installation sketch

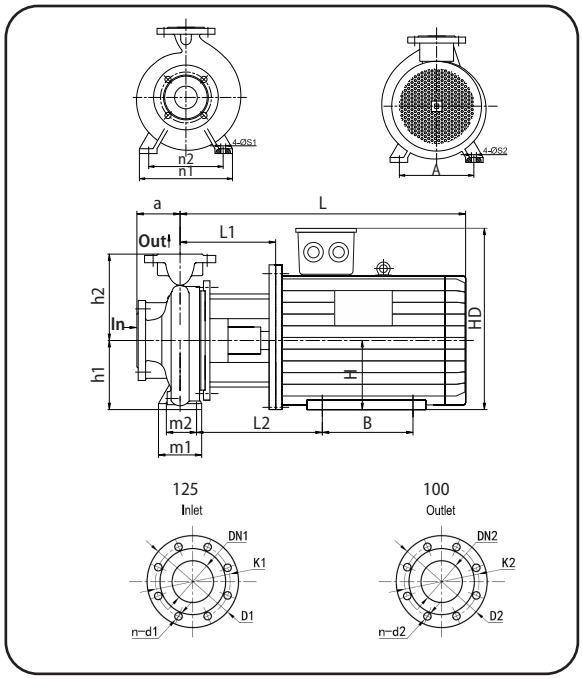

Dimensions -mm

DN1/DN2	32	40	50	65	80	100	125	150	200
D1/D2	140	150	165	185	200	220	250	285	340
K1/K2	100	110	125	145	160	180	210	240	295
n-d1/ n-d2	4-Φ18	4-Φ18	4-Φ18	4-Φ18	8-Φ18	8-Φ18	8-Φ18	8-Φ22	12-Φ22

Model	a	h1	h2	L1	L2	L	A	B	H	HD	m1	m2	n1	n2	S1	S2
CC 100/16-02204	125	200	250	191	194	516	160	140	100	270	160	120	360	280	18	12
CC 100/16-03004	125	200	250	191	194	516	160	140	100	270	160	120	360	280	18	12
CC 100/16-04004	125	200	250	191	201	531	190	140	112	300	160	120	360	280	18	12

Performance table

Model	Impeller Dia. [mm]	Motor size [kW]	Q [L/s]	20	25	30	35	40
CC 100/16-02204	145	2.2	H [m]	5.8	5.3	4.7	3.7	--
CC 100/16-03004	155	3		6.7	6.3	5.6	4.8	--
CC 100/16-03004	165	3		7.7	7.3	6.7	5.8	5
CC 100/16-04004	176	4		8.9	8.5	7.8	7.2	6.3

Performance curves

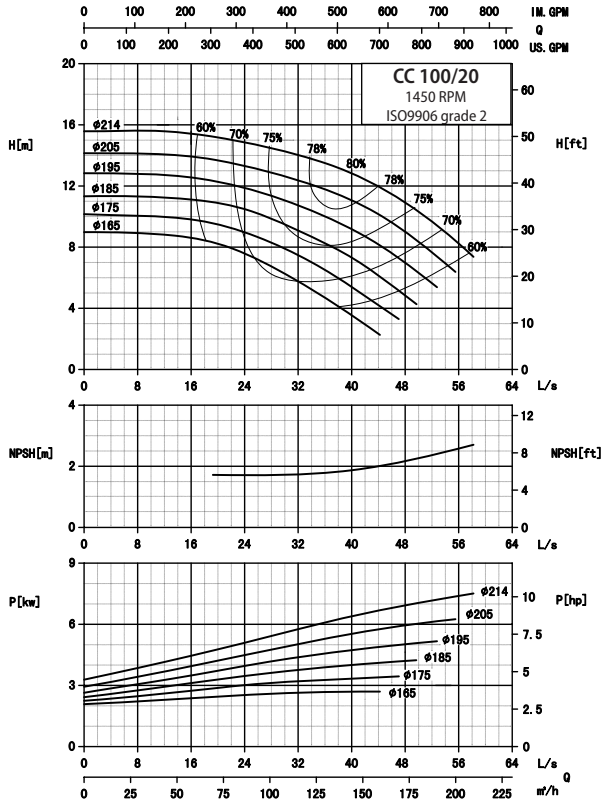

CC 100/20-1450

Installation sketch

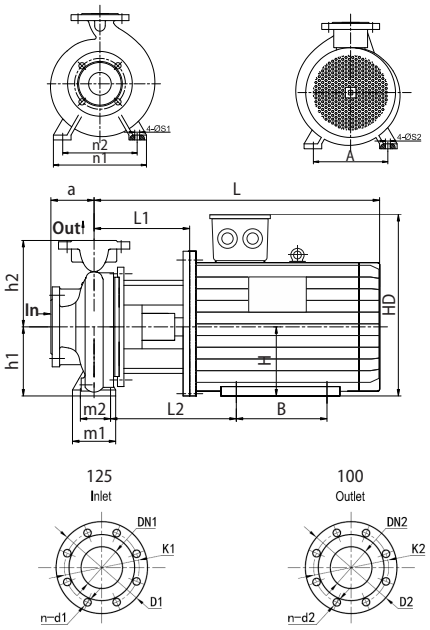

Dimensions -mm

DN1/DN2	32	40	50	65	80	100	125	150	200
D1/D2	140	150	165	185	200	220	250	285	340
K1/K2	100	110	125	145	160	180	210	240	295
n-d1/ n-d2	4-Φ18	4-Φ18	4-Φ18	4-Φ18	8-Φ18	8-Φ18	8-Φ18	8-Φ22	12-Φ22

Model	a	h1	h2	L1	L2	L	A	B	H	HD	m1	m2	n1	n2	S1	S2
CC 100/20-03004	125	200	280	179	183	505	160	140	100	270	160	120	360	280	18	12
CC 100/20-04004	125	200	280	179	189	519	190	140	112	300	160	120	360	280	18	12
CC 100/20-05504	125	200	280	202	231	592	216	140	132	345	160	120	360	280	18	12
CC 100/20-07504	125	200	280	202	231	632	216	178	132	345	160	120	360	280	18	12
CC 100/20-11004	125	200	280	234	282	739	254	210	160	420	160	120	360	280	18	15

Performance table

Model	Impeller Dia. [mm]	Motor size [kW]	Q [L/s]	24	32	40	48	56
CC 100/20-03004	165	3	H [m]	7.5	5.9	3.5	--	--
CC 100/20-04004	175	4		9	7.6	5.5	--	--
CC 100/20-05504	185	5.5		10.5	9	7.5	--	--
CC 100/20-05504	195	5.5		12	10.8	9.1	7	--
CC 100/20-07504	205	7.5		13.5	12.3	11	9	--
CC 100/20-11004	214	11		15	14	12.9	11	8.3

Performance curves

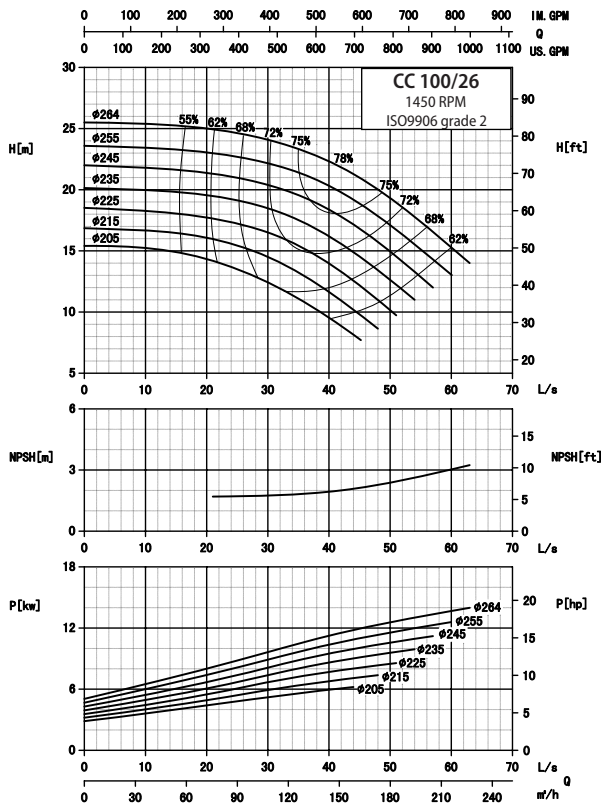

CC 100/26-1450

Installation sketch

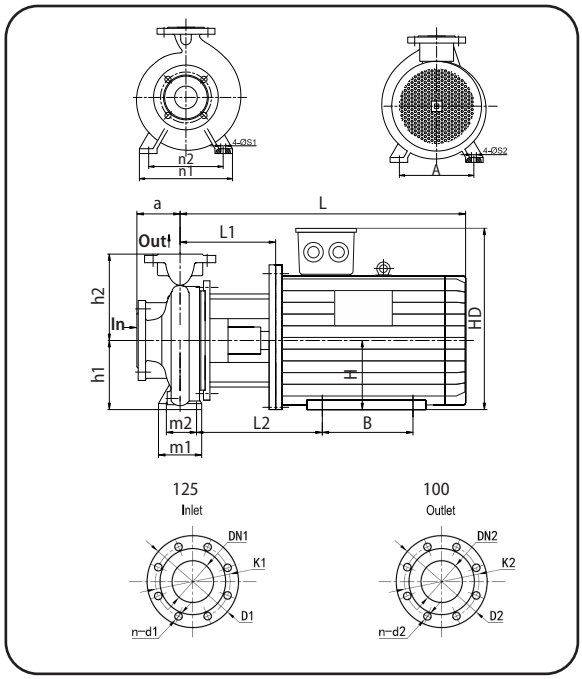

Dimensions -mm

DN1/DN2	32	40	50	65	80	100	125	150	200
D1/D2	140	150	165	185	200	220	250	285	340
K1/K2	100	110	125	145	160	180	210	240	295
n-d1/ n-d2	4-Φ18	4-Φ18	4-Φ18	4-Φ18	8-Φ18	8-Φ18	8-Φ18	8-Φ22	12-Φ22

Model	a	h1	h2	L1	L2	L	A	B	H	HD	m1	m2	n1	n2	S1	S2
CC 100/26-07504	140	225	280	206	235	636	216	178	132	345	160	120	400	315	18	12
CC 100/26-11004	140	225	280	238	286	743	254	210	160	420	160	120	400	315	18	15
CC 100/26-15004	140	225	280	238	286	798	254	254	160	420	160	120	400	315	18	15

Performance table

Model	Impeller Dia. [mm]	Motor size [kW]	Q [L/s]	20	30	40	50	60
CC 100/26-07504	205	7.5	H [m]	14.5	12.5	9.5	--	--
CC 100/26-11004	215	11		16	14.5	11.7	--	--
CC 100/26-11004	225	11		17.8	16.5	14	--	--
CC 100/26-11004	235	11		19.7	18.5	16	12.8	--
CC 100/26-11004	245	11		21.5	20.5	18.3	15	--
CC 100/26-15004	255	15		23	22	20.4	17	--
CC 100/26-15004	264	15		25	24	22.4	19.2	15.2

Performance curves

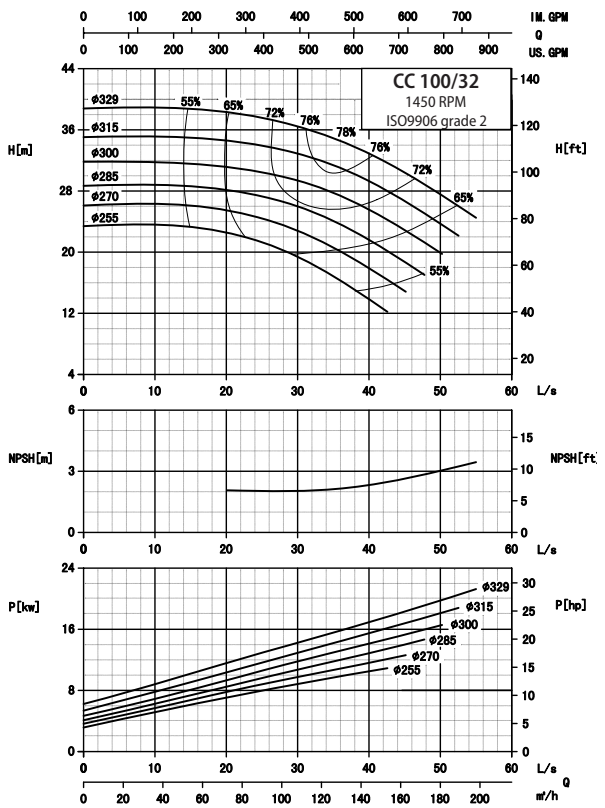

CC 100/32-1450

Installation sketch

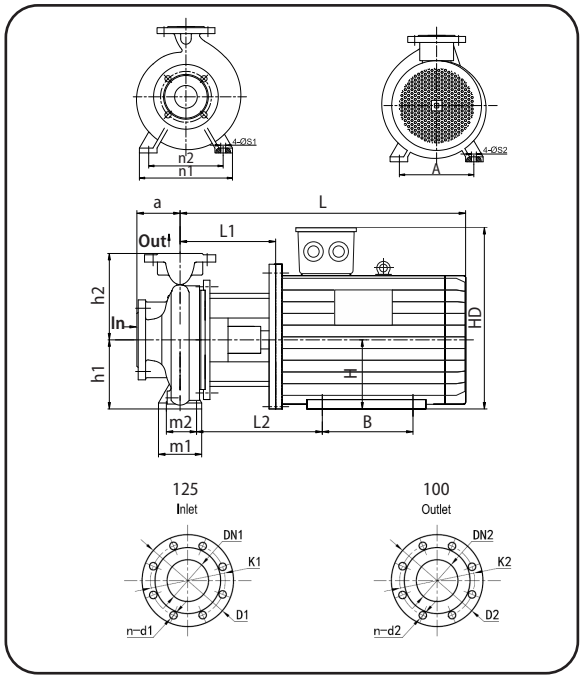

Dimensions -mm

DN1/DN2	32	40	50	65	80	100	125	150	200
D1/D2	140	150	165	185	200	220	250	285	340
K1/K2	100	110	125	145	160	180	210	240	295
n-d1/ n-d2	4-Φ18	4-Φ18	4-Φ18	4-Φ18	8-Φ18	8-Φ18	8-Φ18	8-Φ22	12-Φ22

Model	a	h1	h2	L1	L2	L	A	B	H	HD	m1	m2	n1	n2	S1	S2
CC 100/32-11004	140	250	315	235	283	740	254	210	160	420	160	120	400	315	18	15
CC 100/32-15004	140	250	315	235	283	795	254	254	160	420	160	120	400	315	18	15
CC 100/32-18504	140	250	315	235	296	825	279	241	180	455	160	120	400	315	18	15
CC 100/32-22004	140	250	315	235	296	865	279	279	180	455	160	120	400	315	18	15
CC 100/32-30004	140	250	315	237	310	897	318	305	200	505	160	120	400	315	18	15

Performance table

Model	Impeller Dia. [mm]	Motor size [kW]	Q [L/s]	20	30	40	45	50
CC 100/32-15004	255	15	H [m]	22.5	19.5	14	--	--
CC 100/32-15004	270	15		25.5	23	18	--	--
CC 100/32-15004	285	15		28	26	22	19	--
CC 100/32-18504	300	18.5		31.5	29.5	25.5	23	--
CC 100/32-22004	315	22		34.5	33	29.5	27	24
CC 100/32-22004	329	22		38.5	36.5	33	30	27.5

Performance curves

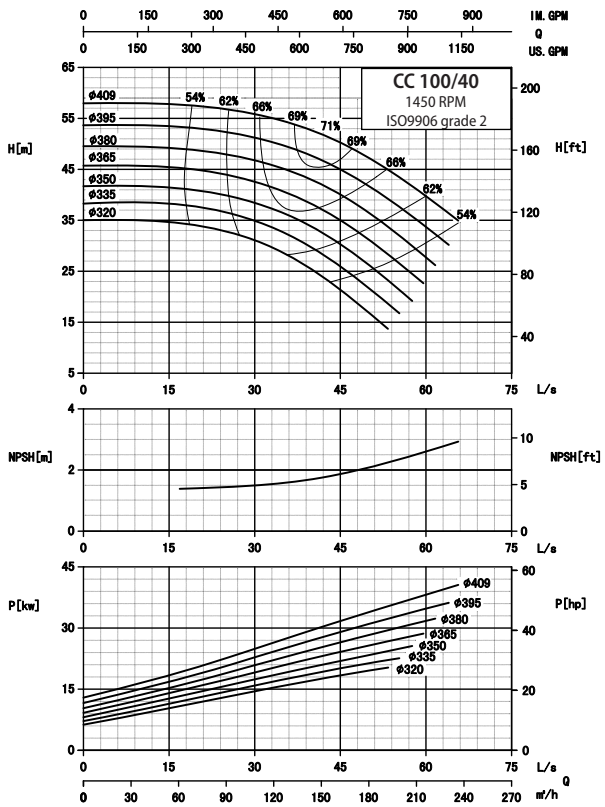

CC 100/40-1450

Installation sketch

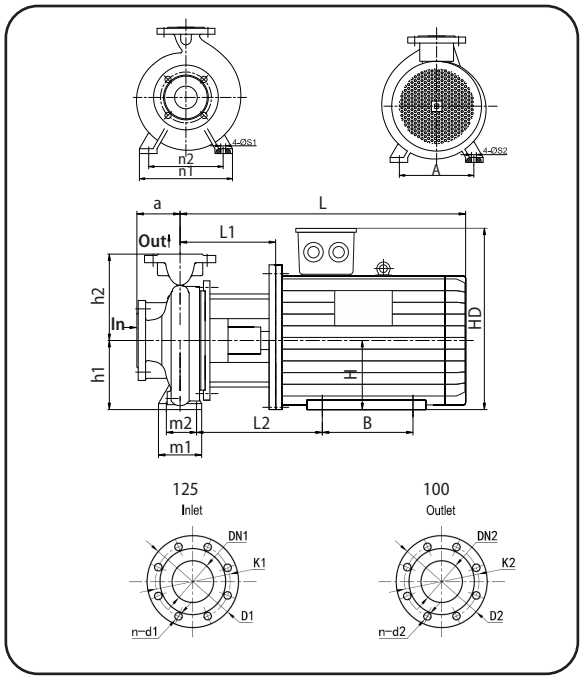

Dimensions -mm

DN1/DN2	32	40	50	65	80	100	125	150	200
D1/D2	140	150	165	185	200	220	250	285	340
K1/K2	100	110	125	145	160	180	210	240	295
n-d1/ n-d2	4-Φ18	4-Φ18	4-Φ18	4-Φ18	8-Φ18	8-Φ18	8-Φ18	8-Φ22	12-Φ22

Model	a	h1	h2	L1	L2	L	A	B	H	HD	m1	m2	n1	n2	S1	S2
CC 100/40-22004	140	280	355	249	295	879	279	279	180	455	200	150	500	400	23	15
CC 100/40-30004	140	280	355	249	307	909	318	305	200	505	200	150	500	400	23	19
CC 100/40-37004	140	280	355	284	358	964	356	286	225	560	200	150	500	400	23	19
CC 100/40-45004	140	280	355	284	358	989	356	311	225	560	200	150	500	400	23	19

Performance table

Model	Impeller Dia. [mm]	Motor size [kW]	Q [L/s]	21	30	36	45	60
CC 100/40-22004	320	22	H [m]	34	31	28	21	--
CC 100/40-22004	335	22		37	35	32	26	--
CC 100/40-30004	350	30		40	38	36	30	--
CC 100/40-30004	365	30		45	43	40	35	--
CC 100/40-37004	380	37		49	47	45	40	--
CC 100/40-37004	395	37		53	51	49	45	34
CC 100/40-45004	409	45		57	56	54	50	40

Performance curves

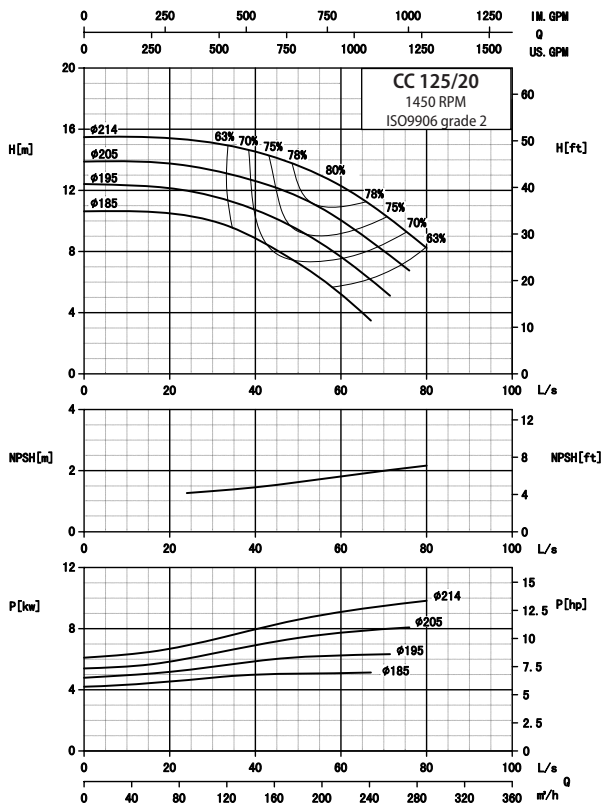

CC 125/20-1450

Installation sketch

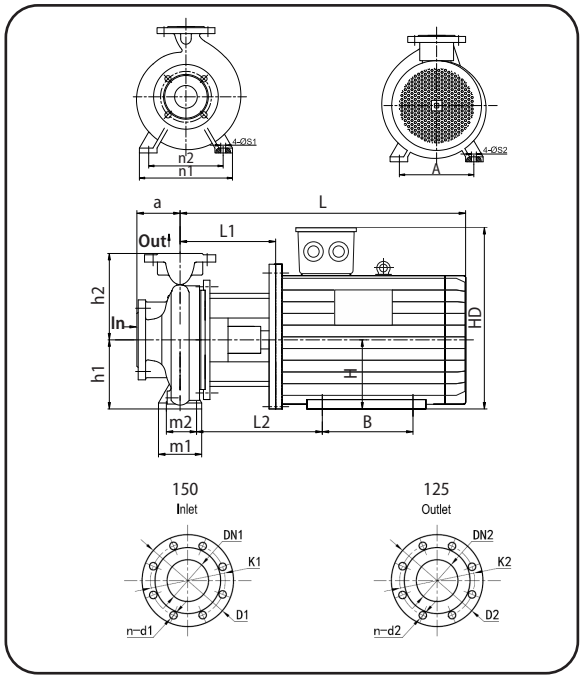

Dimensions -mm

DN1/DN2	32	40	50	65	80	100	125	150	200
D1/D2	140	150	165	185	200	220	250	285	340
K1/K2	100	110	125	145	160	180	210	240	295
n-d1/ n-d2	4-Φ18	4-Φ18	4-Φ18	4-Φ18	8-Φ18	8-Φ18	8-Φ18	8-Φ22	12-Φ22

Model	a	h1	h2	L1	L2	L	A	B	H	HD	m1	m2	n1	n2	S1	S2
CC 125/20-07504	140	250	315	202	231	632	216	178	132	345	160	120	400	315	18	12
CC 125/20-11004	140	250	315	234	282	739	254	210	160	420	160	120	400	315	18	15

Performance table

Model	Impeller Dia. [mm]	Motor size [kW]	Q [L/s]	35	40	50	60	70
CC 125/20-07504	185	7.5	H [m]	9.5	9	7.2	5.2	--
CC 125/20-07504	195	7.5		11.2	10.7	9.5	7.8	--
CC 125/20-11004	205	11		13	12.6	11.7	10	8
CC 125/20-11004	214	11		14.9	14.5	13.6	12.3	10.5

Performance curves

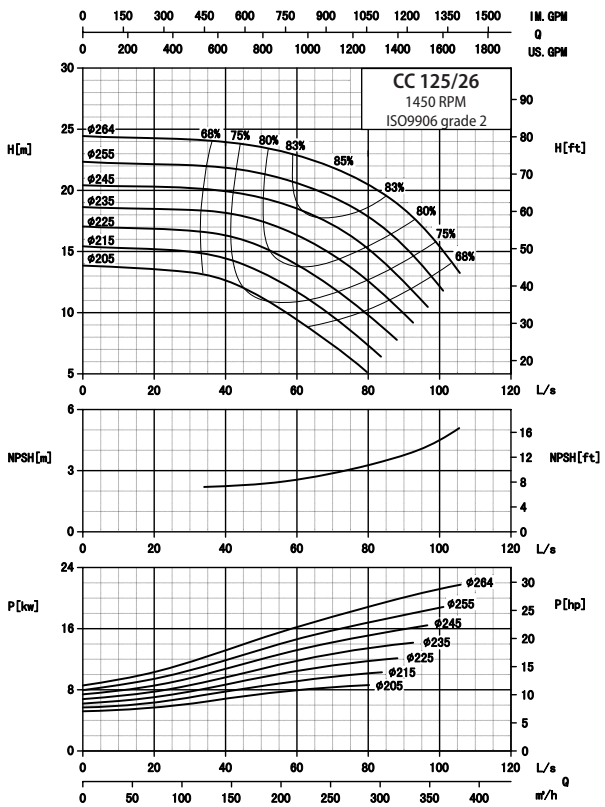

CC 125/26-1450

Installation sketch

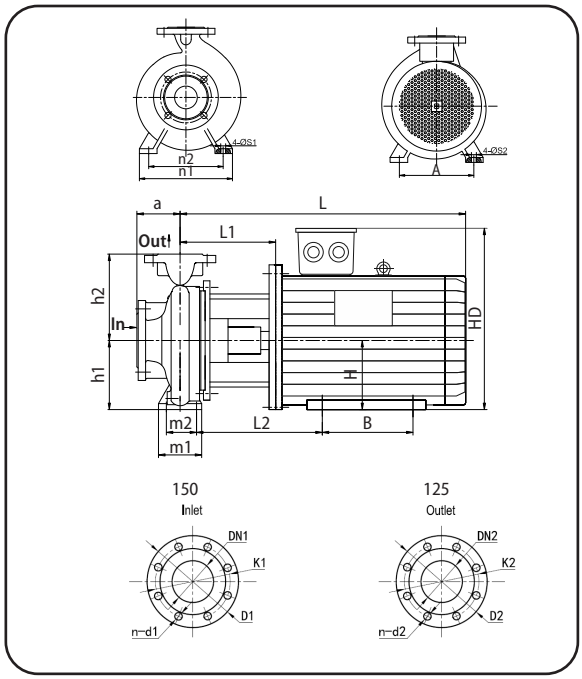

Dimensions -mm

DN1/DN2	32	40	50	65	80	100	125	150	200
D1/D2	140	150	165	185	200	220	250	285	340
K1/K2	100	110	125	145	160	180	210	240	295
n-d1/ n-d2	4-Φ18	4-Φ18	4-Φ18	4-Φ18	8-Φ18	8-Φ18	8-Φ18	8-Φ22	12-Φ22

Model	a	h1	h2	L1	L2	L	A	B	H	HD	m1	m2	n1	n2	S1	S2
CC 125/26-15004	140	250	355	238	286	798	254	254	160	420	160	120	400	315	18	15
CC 125/26-18504	140	250	355	238	299	822	279	241	180	455	160	120	400	315	18	15
CC 125/26-22004	140	250	355	238	299	862	279	279	180	455	160	120	400	315	18	15
CC 125/26-30004	140	250	355	241	314	901	318	305	200	505	160	120	400	315	18	19

Performance table

Model	Impeller Dia. [mm]	Motor size [kW]	Q [L/s]	40	60	80	90	100
CC 125/26-11004	205	11	H [m]	12.8	9.5	--	--	--
CC 125/26-11004	215	11		14.5	11.8	--	--	--
CC 125/26-15004	225	15		16.2	14	10	--	--
CC 125/26-15004	235	15		18	16.2	12.8	--	--
CC 125/26-18504	245	18.5		20	18.7	15.1	12.6	--
CC 125/26-22004	255	22		21.9	20.6	18	15.5	--
CC 125/26-22004	264	22		24	22.9	20.5	18.4	15.4

Performance curves

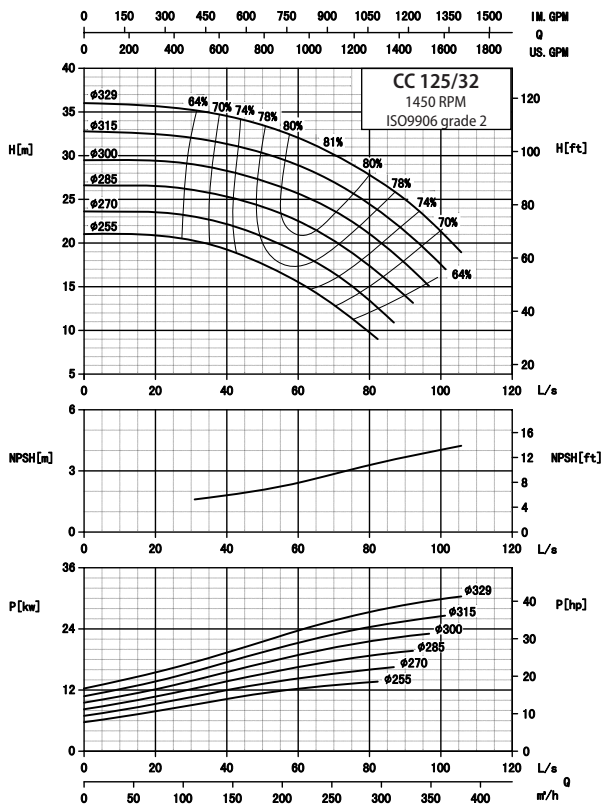

CC 125/32-1450

Installation sketch

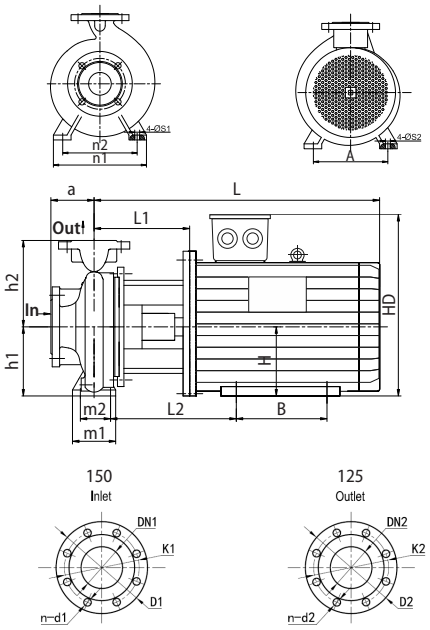

Dimensions -mm

DN1/DN2	32	40	50	65	80	100	125	150	200
D1/D2	140	150	165	185	200	220	250	285	340
K1/K2	100	110	125	145	160	180	210	240	295
n-d1/ n-d2	4-Φ18	4-Φ18	4-Φ18	4-Φ18	8-Φ18	8-Φ18	8-Φ18	8-Φ22	12-Φ22

Model	a	h1	h2	L1	L2	L	A	B	H	HD	m1	m2	n1	n2	S1	S2
CC 125/32-15004	140	280	355	249	282	809	254	254	160	420	200	150	500	400	23	15
CC 125/32-18504	140	280	355	249	295	839	279	241	180	455	200	150	500	400	23	15
CC 125/32-22004	140	280	355	249	295	879	279	279	180	455	200	150	500	400	23	15
CC 125/32-30004	140	280	355	249	307	909	318	305	200	505	200	150	500	400	23	19
CC 125/32-37004	140	280	355	285	359	965	356	286	225	560	200	150	500	400	23	19

Performance table

Model	Impeller Dia. [mm]	Motor size [kW]	Q [L/s]	40	60	80	90	100
CC 125/32-15004	255	15	H [m]	19	15.5	--	--	--
CC 125/32-15004	270	15		22	19	13.5	--	--
CC 125/32-18504	285	18.5		25.2	22.5	17.4	--	--
CC 125/32-22004	300	22		28.2	25.7	21	17.8	--
CC 125/32-30004	315	30		31.5	29	24.5	21.2	--
CC 125/32-30004	329	30		34.6	32	27.7	25	21.4

Performance curves

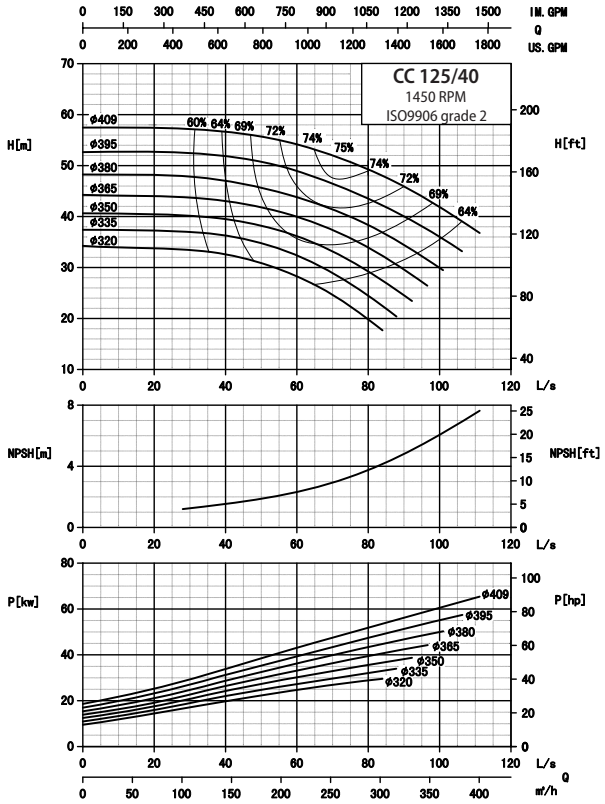

CC 125/40-1450

Installation sketch

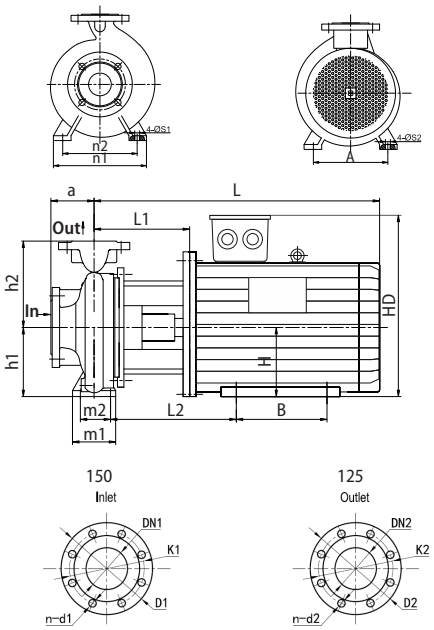

Dimensions -mm

DN1/DN2	32	40	50	65	80	100	125	150	200
D1/D2	140	150	165	185	200	220	250	285	340
K1/K2	100	110	125	145	160	180	210	240	295
n-d1/ n-d2	4-Φ18	4-Φ18	4-Φ18	4-Φ18	8-Φ18	8-Φ18	8-Φ18	8-Φ22	12-Φ22

Model	a	h1	h2	L1	L2	L	A	B	H	HD	m1	m2	n1	n2	S1	S2
CC 125/40-30004	160	315	400	249	307	909	318	305	200	505	200	150	500	400	23	19
CC 125/40-37004	160	315	400	284	358	964	356	286	225	560	200	150	500	400	23	19
CC 125/40-45004	160	315	400	284	358	989	356	311	225	560	200	150	500	400	23	19
CC 125/40-55004	160	315	400	284	377	1054	406	349	250	615	200	150	500	400	23	24
CC 125/40-75004	160	315	400	284	399	1129	457	368	280	680	200	150	500	400	23	24

Performance table

Model	Impeller Dia. [mm]	Motor size [kW]	Q [L/s]	40	60	80	90	100
CC 125/40-30004	320	30	H [m]	32.5	28	20	--	--
CC 125/40-37004	335	37		36	32	24.5	--	--
CC 125/40-37004	350	37		39.5	36	29.5	--	--
CC 125/40-45004	365	45		43	40	34	30	--
CC 125/40-45004	380	45		47	44	38	34	--
CC 125/40-55004	395	55		52	49	43.5	40	36
CC 125/40-75004	409	75		56.5	54	49	46	42

Performance curves

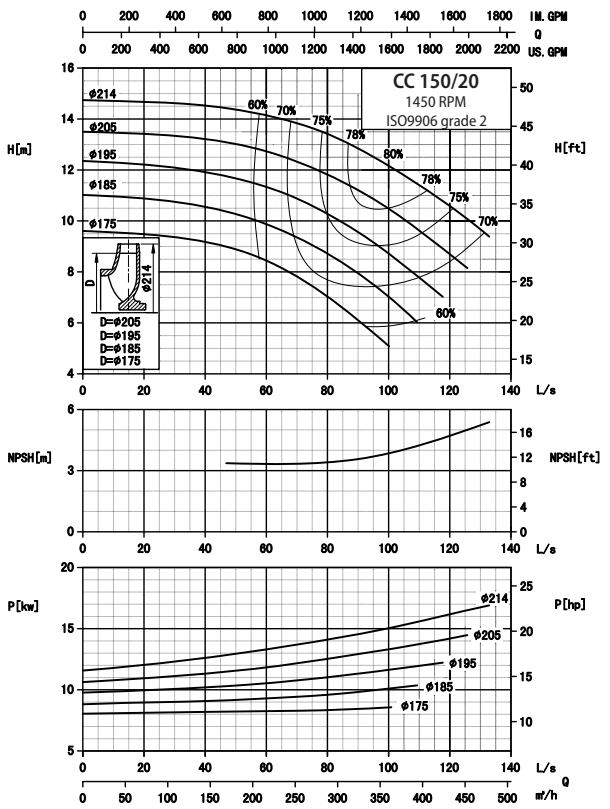

CC 150/20-1450

Installation sketch

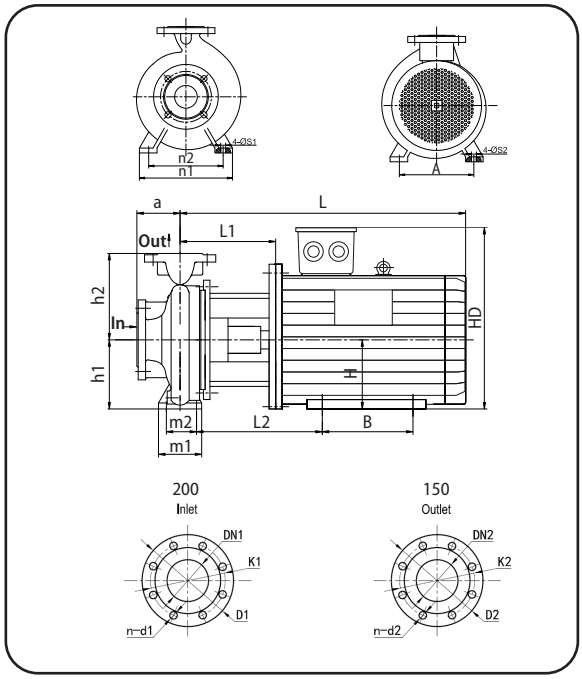

Dimensions -mm

DN1/DN2	32	40	50	65	80	100	125	150	200
D1/D2	140	150	165	185	200	220	250	285	340
K1/K2	100	110	125	145	160	180	210	240	295
n-d1/ n-d2	4-Φ18	4-Φ18	4-Φ18	4-Φ18	8-Φ18	8-Φ18	8-Φ18	8-Φ22	12-Φ22

Model	a	h1	h2	L1	L2	L	A	B	H	HD	m1	m2	n1	n2	S1	S2
CC 150/20-11004	160	280	400	261	294	766	254	241	160	420	200	150	400	315	23	15
CC 150/20-15004	160	280	400	261	294	821	254	254	160	420	200	150	400	315	23	15
CC 150/20-18504	160	280	400	261	307	851	279	241	180	455	200	150	400	315	23	15

Performance table

Model	Impeller Dia. [mm]	Motor size [kW]	Q [L/s]	60	80	100	110	120
CC 150/20-11004	175	11	H [m]	8.5	7	--	--	--
CC 150/20-15004	185	15		9.8	8.8	7	--	--
CC 150/20-15004	195	15		11.3	10.3	8.7	7.8	--
CC 150/20-18504	205	18.5		12.8	11.8	10.5	9.6	8.7
CC 150/20-18504	214	18.5		14.2	13.4	12.2	11.4	10.6

Performance curves

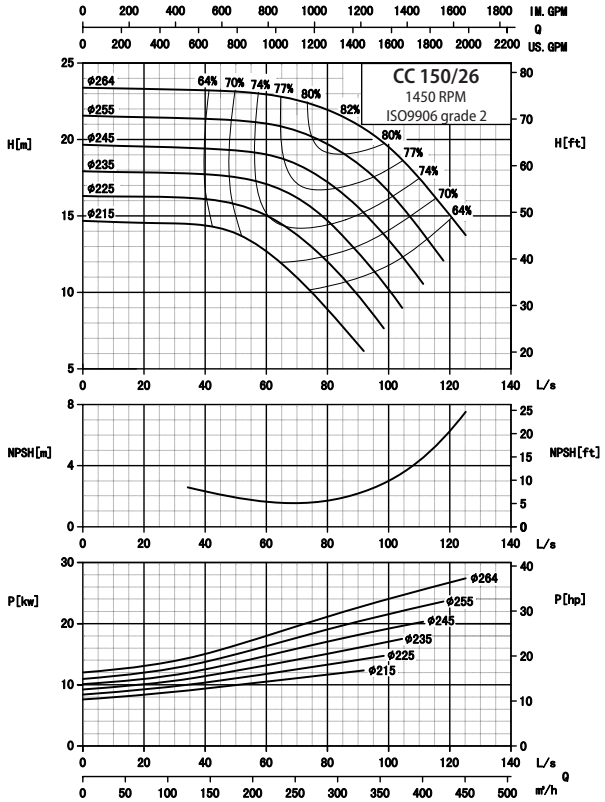

CC 150/26-1450

Installation sketch

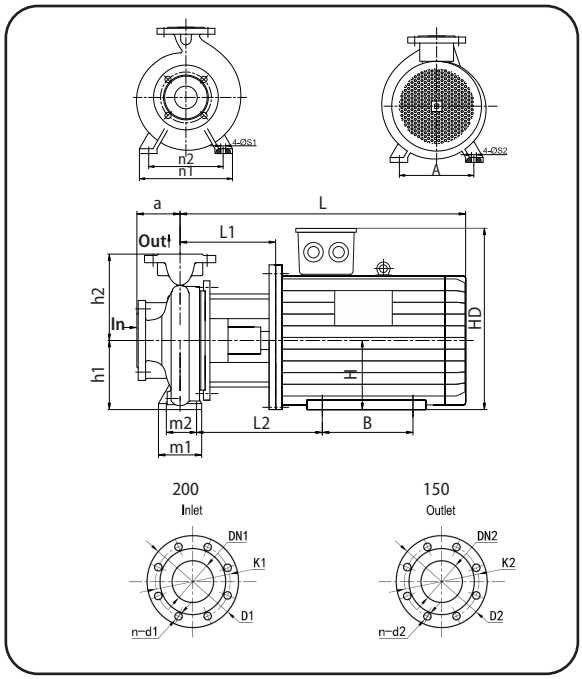

Dimensions -mm

DN1/DN2	32	40	50	65	80	100	125	150	200
D1/D2	140	150	165	185	200	220	250	285	340
K1/K2	100	110	125	145	160	180	210	240	295
n-d1/ n-d2	4-Φ18	4-Φ18	4-Φ18	4-Φ18	8-Φ18	8-Φ18	8-Φ18	8-Φ22	12-Φ22

Model	a	h1	h2	L1	L2	L	A	B	H	HD	m1	m2	n1	n2	S1	S2
CC 150/26-15004	160	250	355	248	281	808	254	254	160	420	200	150	450	350	23	15
CC 150/26-18504	160	250	355	248	294	838	279	241	180	455	200	150	450	350	23	15
CC 150/26-22004	160	250	355	248	294	878	279	279	180	455	200	150	450	350	23	15
CC 150/26-30004	160	250	355	248	306	908	318	305	200	505	200	150	450	350	23	19

Performance table

Model	Impeller Dia. [mm]	Motor size [kW]	Q [L/s]	40	60	80	100	120
CC 150/26-15004	215	15	H [m]	14.4	12.8	9	--	--
CC 150/26-18504	225	18.5		16	15	12	--	--
CC 150/26-18504	235	18.5		17.8	17	14.7	10	--
CC 150/26-22004	245	22		19.5	19	17.1	13.4	--
CC 150/26-30004	255	30		21.3	21	19.8	16.5	--
CC 150/26-30004	264	30		23.2	23	22	19.5	15

Performance curves

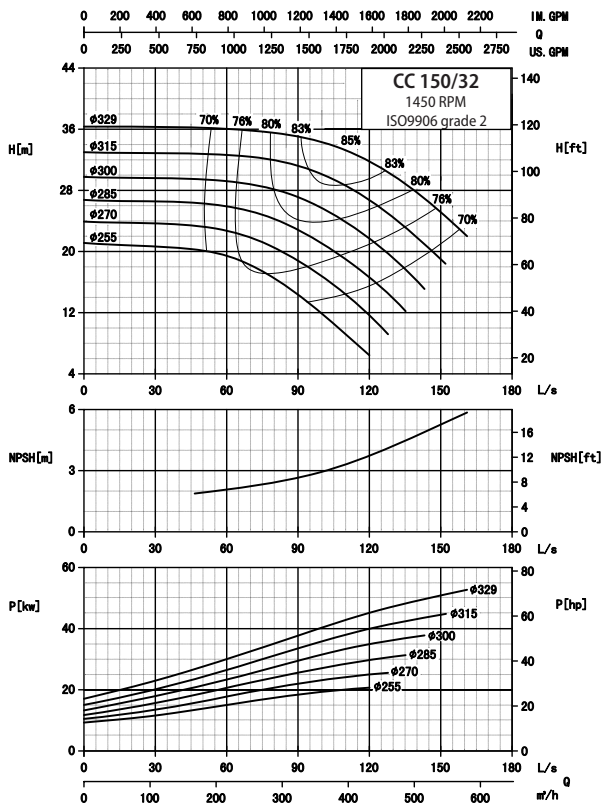

CC 150/32-1450

Installation sketch

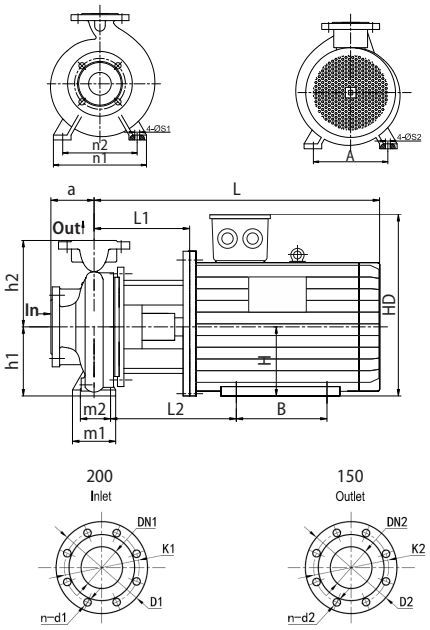

Dimensions -mm

DN1/DN2	32	40	50	65	80	100	125	150	200
D1/D2	140	150	165	185	200	220	250	285	340
K1/K2	100	110	125	145	160	180	210	240	295
n-d1/ n-d2	4-Φ18	4-Φ18	4-Φ18	4-Φ18	8-Φ18	8-Φ18	8-Φ18	8-Φ22	12-Φ22

Model	a	h1	h2	L1	L2	L	A	B	H	HD	m1	m2	n1	n2	S1	S2
CC 150/32-22004	160	280	400	250	295	880	279	279	180	455	200	150	550	450	23	15
CC 150/32-30004	160	280	400	250	307	910	318	305	200	505	200	150	550	450	23	19
CC 150/32-37004	160	280	400	285	358	965	356	286	225	560	200	150	550	450	23	19
CC 150/32-45004	160	280	400	285	358	990	356	311	225	560	200	150	550	450	23	19
CC 150/32-55004	160	280	400	285	377	1055	406	349	250	615	200	150	550	450	23	24

Performance table

Model	Impeller Dia. [mm]	Motor size [kW]	Q [L/s]	30	60	90	120	150
CC 150/32-22004	255	22	H [m]	20.5	19.5	14.2	6	--
CC 150/32-30004	270	30		24	22.8	18.8	12	--
CC 150/32-30004	285	30		26.5	26	22.4	16.8	--
CC 150/32-37004	300	37		30	28.9	27.1	22	--
CC 150/32-45004	315	45		32.6	32	31.4	27	19
CC 150/32-55004	329	55		36.2	36	35.3	28	25.4

Performance curves

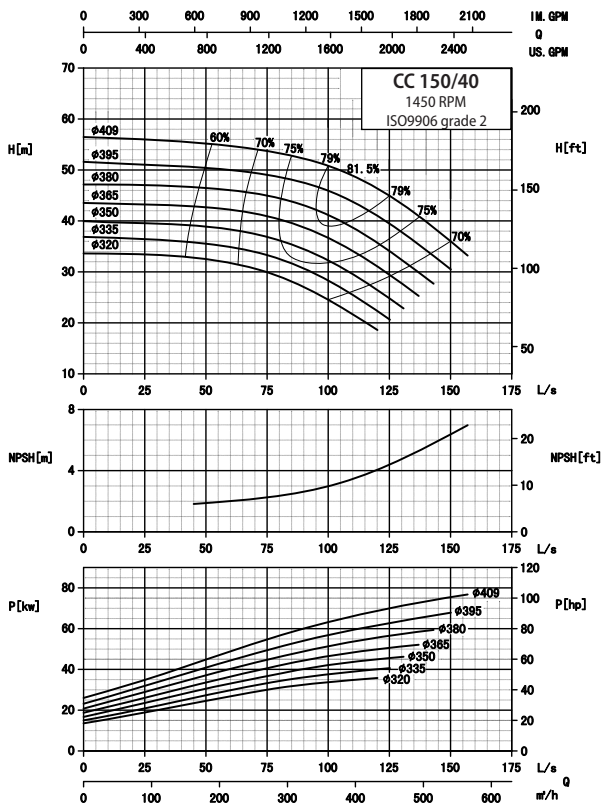

CC 150/40-1450

Installation sketch

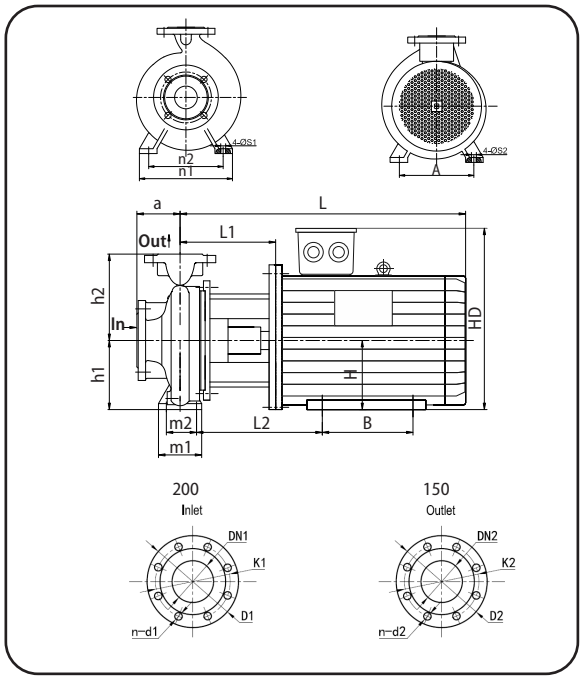

Dimensions -mm

DN1/DN2	32	40	50	65	80	100	125	150	200
D1/D2	140	150	165	185	200	220	250	285	340
K1/K2	100	110	125	145	160	180	210	240	295
n-d1/ n-d2	4-Φ18	4-Φ18	4-Φ18	4-Φ18	8-Φ18	8-Φ18	8-Φ18	8-Φ22	12-Φ22

Model	a	h1	h2	L1	L2	L	A	B	H	HD	m1	m2	n1	n2	S1	S2
CC 150/40-37004	160	315	450	284	358	996	356	286	225	560	200	150	550	450	23	19
CC 150/40-45004	160	315	450	284	358	989	356	311	225	560	200	150	550	450	23	19
CC 150/40-55004	160	315	450	284	377	1054	406	349	250	615	200	150	550	450	23	24
CC 150/40-75004	160	315	450	284	399	1129	457	368	280	680	200	150	550	450	23	24
CC 150/40-90004	160	315	450	284	399	1179	457	419	280	680	200	150	550	450	23	24

Performance table

Model	Impeller Dia. [mm]	Motor size [kW]	Q [L/s]	25	50	75	100	125
CC 150/40-37004	320	37	H [m]	34	32	30	24.3	--
CC 150/40-45004	335	45		36	35.8	33.4	28	21
CC 150/40-45004	350	45		39.7	39	37	32	24.7
CC 150/40-55004	365	55		43.9	42.4	41	36.3	29.5
CC 150/40-75004	380	75		47	46.2	45	41.7	34
CC 150/40-75004	395	75		51.5	50.2	49.1	46	39.8
CC 150/40-90004	409	90		56	55.2	54	51.1	44.9

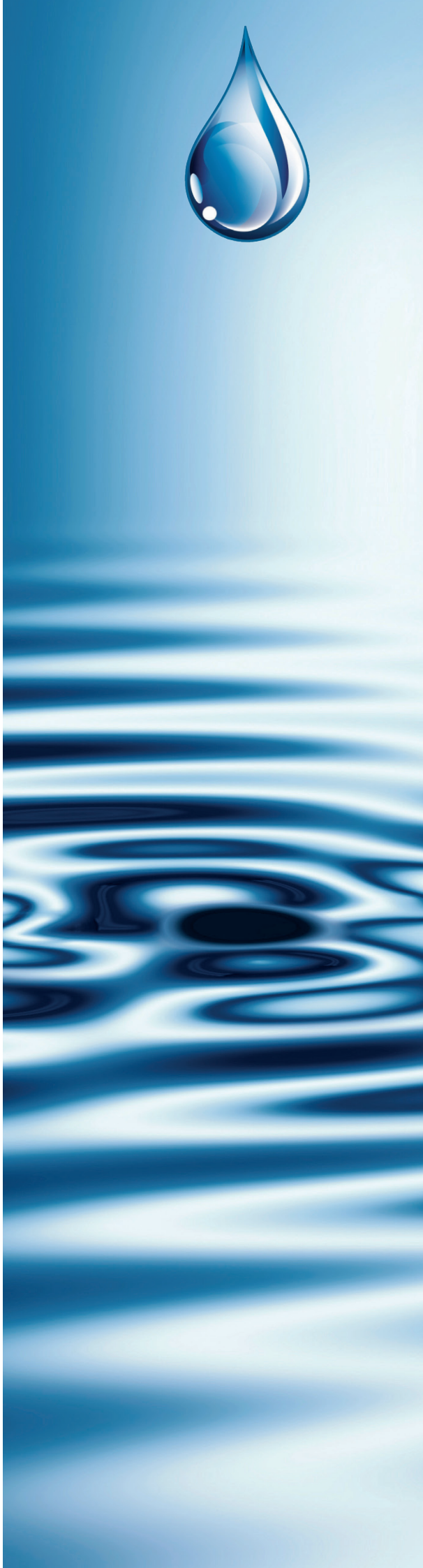

Swiss Pump Company AG
Moosweg 36
CH - 3645 Thun - Gwatt
Switzerland
Tel. +41 33 223 11 00
Fax +41 33 223 11 22
mail@swisspump.com

www.swisspump.com